Service Manual

DEH-P8200R/X1N/UC

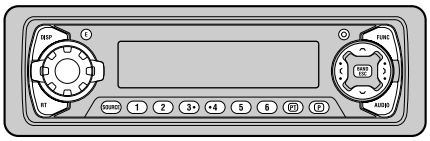

ORDER NO.
CRT2476

MULTI-CD CONTROL HIGH POWER CD PLAYER WITH RDS TUNER

DEH-P8200R X1N/UC

DEH-P8250 X1N/ES

● This service manual should be used together with the following manual(s):

Model No.	Order No.	Mech. Module	Remarks
CX-958	CRT2423	S8.1	CD Mech. Module:Circuit Description, Mech.Description, Disassembly

CONTENTS

1. SAFETY INFORMATION 2
2. EXPLODED VIEWS AND PARTS LIST 2
3. BLOCK DIAGRAM AND SCHEMATIC DIAGRAM ...10
4. PCB CONNECTION DIAGRAM 28
5. ELECTRICAL PARTS LIST 39
6. ADJUSTMENT.....47
7. GENERAL INFORMATION 52
   7.1 DIAGNOSIS 52
      7.1.1 TEST MODE 52
      7.1.2 DISASSEMBLY 56
   7.2 IC 61
   7.3 OPERATIONAL FLOW CHART 71
8. OPERATIONS AND SPECIFICATIONS.....72

PIONEER CORPORATION 4-1, Meguro 1-Chome, Meguro-ku, Tokyo 153-8654, Japan
PIONEER ELECTRONICS SERVICE INC. P.O.Box 1760, Long Beach, CA 90801-1760 U.S.A.
PIONEER EUROPE N.V. Haven 1087 Keetberglaan 1, 9120 Melsele, Belgium
PIONEER ELECTRONICS ASIACENTRE PTE.LTD. 253 Alexandra Road, #04-01, Singapore 159936

© **PIONEER CORPORATION 2000**

K-ZZY. FEB. 2000 Printed in Japan

● **CD Player Service Precautions**

1. For pickup unit(CXX1285) handling, please refer to"Disassembly"(see page 56).
   During replacement, handling precautions shall be taken to prevent an electrostatic discharge(protection by a short pin).
2. During disassembly, be sure to turn the power off since an internal IC might be destroyed when a connector is plugged or unplugged.
3. Please checking the grating after changing the service pickup unit(see page 49).

1. SAFETY INFORMATION

CAUTION

This service manual is intended for qualified service technicians; it is not meant for the casual do-it-yourselfer.
Qualified technicians have the necessary test equipment and tools, and have been trained to properly and safely repair complex products such as those covered by this manual.
Improperly performed repairs can adversely affect the safety and reliability of the product and may void the warranty.
If you are not qualified to perform the repair of this product properly and safely; you should not risk trying to do so and refer the repair to a qualified service technician.

WARNING

This product contains lead in solder and certain electrical parts contain chemicals which are known to the state of California to cause cancer, birth defects or other reproductive harm.
Health & Safety Code Section 25249.6 - Proposition 65

2. EXPLODED VIEWS AND PARTS LIST

2.1 PACKING

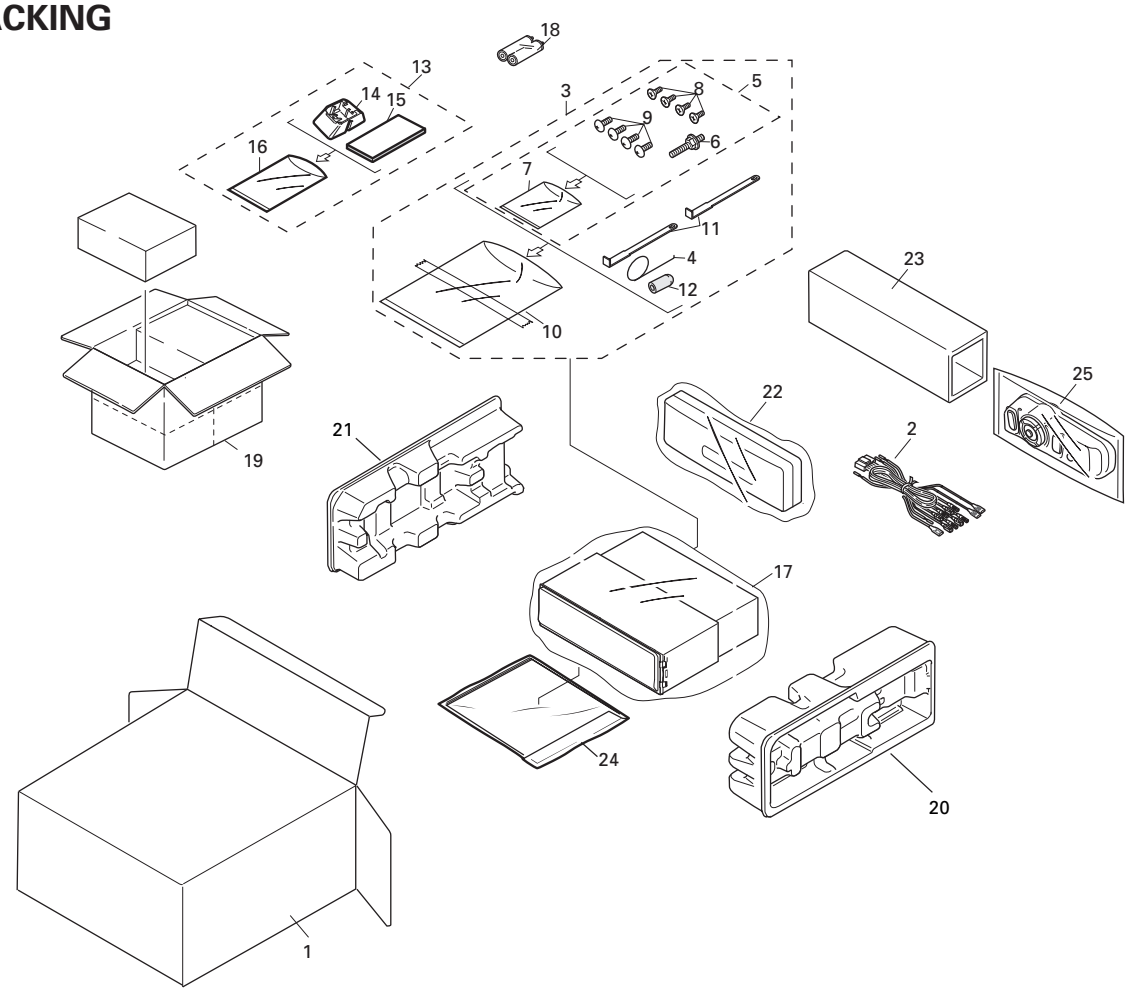

NOTE:

- Parts marked by "*" are generally unavailable because they are not in our Master Spare Parts List.
- Screws adjacent to ∇ mark on the product are used for disassembly.

● PACKING SECTION PARTS LIST

Mark	No.	Description	Part No.
	1	Carton(UC)	CHG4006
		Carton(ES)	CHG4004
	2	Cord Assy	CDE6242
*	3	Accessory Assy	CEA2395
	4	Spring	CBH1650
*	5	Screw Assy	CEA2396
	6	Screw	CBA1002
*	7	Polyethylene Bag	CEG-127
	8	Screw	CRZ50P090FMC
	9	Screw	TRZ50P080FMC
*	10	Polyethylene Bag	CEG-158
	11	Handle	CNC5395
	12	Bush	CNV3930
	13	Base Assy	CEA2426
*	14	Base	CNS5031
*	15	Sheet	CZA3371
	16	Polyethylene Bag	CZE3188
	17	Polyethylene Bag(UC)	CEG1173
		Polyethylene Bag(ES)	CEG-162
	18	Battery	CEX1006
	19	Contain Box(UC)	CHL4006
		Contain Box(ES)	CHL4004
	20	Protector	CHP2251
	21	Protector	CHP2252
	22	Case Assy	CXB3520
	23	Inner Box	CHW1759
	24-1	Polyethylene Bag	CEG1116
	24-2	Owner's Manual(UC)	CRD3162
		Owner's Manual(ES)	CRD3164
	24-3	Owner's Manual(ES)	CRD3165
	24-4	Owner's Manual(ES)	CRD3166
	24-5	Owner's Manual(ES)	CRD3249
	24-6	Installation Manual(UC)	CRD3163
		Installation Manual(ES)	CRD3167
*	24-7	Card	ARY1048
*	24-8	Warranty Card	CRP1207
*	24-9	Warranty Card(ES)	CRP1216
	25	Remote Control Assy	CXB3875

● Owner's Manual, Installation Manual

Model	Part No.	Language
DEH-P8200R/X1N/UC	CRD3162	English, French
	CRD3163	English, French
DEH-P8250/X1N/ES	CRD3164	English, Spanish
	CRD3165	Portuguese(B), French
	CRD3166	Arabic, Chinese
	CRD3167	English, Spanish, Portuguese(B), French, Arabic, Chinese
	CRD3249	English, French

2.2 EXTERIOR

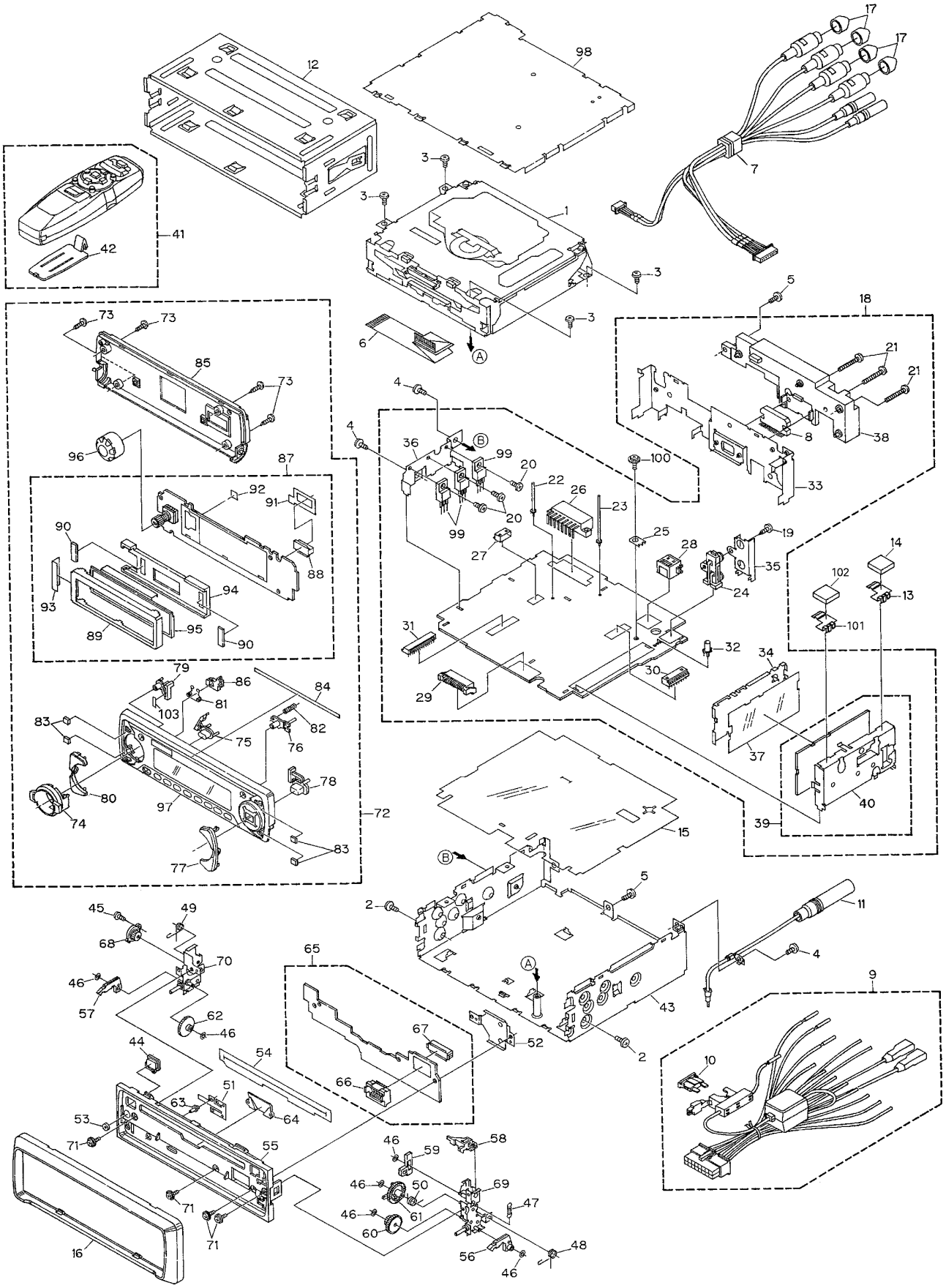

12
98
17
17
7
3
3
1
3
3
41
42
6
A
5
18
21
21
8
38
33
73
73
85
73
96
87
92
91
90
88
93
94
89
95
90
4
4
36
B
99
20
22
26
23
100
99
20
27
25
28
19
35
24
14
102
13
101
31
32
34
30
29
37
40
39
79
86
81
84
103
83
82
75
76
78
80
97
74
72
77
83
15
B
5
2
11
4
45
49
68
70
46
57
62
46
65
A
43
9
67
52
2
10
44
54
51
63
64
66
53
71
55
46
59
58
46
50
69
47
46
61
60
71
71
16
56
48
46

(1) EXTERIOR SECTION PARTS LIST

Mark	No.	Description	Part No.
	1	CD Mechanism Module(S8.1)	CXK5202
	2	Screw	BMZ30P040FZK
	3	Screw	BSZ26P060FMC
	4	Screw	BSZ30P060FMC
	5	Screw	BSZ30P100FMC
	6	Cable	CDE6164
	7	Cord Assy	CDE6195
	8	IC(IC301)	PAL005A
	9	Cord Assy	CDE6242
	10	Fuse(10A)	CEK1136
	11	Antenna Cable	CDH1266
	12	Holder	CNC6798
	13	Holder	CNC8357
	14	Spacer	CNM6482
	15	Insulator	CNM6606
	16	Panel	See Contrast table(2)
	17	Cap	CNV2680
	18	Tuner Amp Unit	See Contrast table(2)
	19	Screw	BPZ26P060FMC
	20	Screw	BSZ26P060FMC
	21	Screw	BSZ26P160FMC
	22	Clamper	CEF1007
	23	Clamper	CEF1009
	24	Pin Jack(CN351)	CKB1028
	25	Terminal(CN402)	CKF1059
	26	Plug(CN901)	CKM1294
*	27	Plug(CN451)	CKS1052
	28	Connector(CN101)	CKS3408
	29	Plug(CN801)	CKS3537
	30	Connector(CN361)	CKS3602
	31	Connector(CN651)	CKS3842
	32	Pin Jack(CN401)	CKX1046
	33	Panel	CNB2376
	34	Holder	CNC7533
	35	Holder	CNC8298
	36	Holder	CNC8615
	37	Insulator	CNM5967
	38	Heat Sink	CNR1550
	39	FM/AM Tuner Unit	CWE1501
	40	Holder	CNC7532
	41	Remote Control Assy	CXB3875
	42	Battery Cover	CNS5032
	43	Chassis Unit	CXB5063
	44	Button(EJECT)	CAC6428
	45	Screw(M2x2)	CBA1176
	46	Washer	CBF1038
	47	Spring	CBH2310
	48	Spring	CBH2312
	49	Spring	CBH2313
	50	Spring	CBH2393

Mark	No.	Description	Part No.
	51	Spring	CBL1492
	52	Holder	CNC8616
	53	Cushion	CNM5486
	54	Cover	CNM6854
	55	Panel	CNS5791
	56	Arm	CNV5991
	57	Arm	CNV5992
	58	Arm	CNV5993
	59	Lever	CNV5994
	60	Gear	CNV5995
	61	Gear	CNV5996
	62	Gear	CNV5997
	63	Pin	CNV6027
	64	Lighting Conductor	CNV6069
	65	Panel PCB Unit	CWM7157
	66	Socket(CN902)	CKS3550
	67	Connector(CN903)	CKS4206
	68	Damper Unit	CXB5070
	69	Holder Unit	CXB5736
	70	Holder Unit	CXB5737
	71	Screw	IMS20P045FZK
	72	Detach Grille Assy	See Contrast table(2)
	73	Screw	BPZ20P100FZK
	74	Knob	CAA1525
	75	Button(SOURCE)	CAC6331
	76	Button(OPEN)	CAC6333
	77	Button(F,A)	See Contrast table(2)
	78	Button(BAND)	See Contrast table(2)
	79	Button(E)	CAC6464
	80	Button(DISP)	See Contrast table(2)
	81	Spring	CBH2316
	82	Spring	CBH2320
	83	Cushion	CNM6542
	84	Spacer	CNM6871
	85	Cover	See Contrast table(2)
	86	Holder	CNV6177
	87	Keyboard Unit	CWM7268
	88	Connector(CN1901)	CKS4205
	89	Holder	CNC8698
	90	Cushion	CNM6633
	91	Spacer	CNM6710
	92	Spacer	CNM6711
	93	Sheet	CNM6746
	94	Holder	CNV6105
	95	OEL Unit	MXR8004
	96	Knob Unit	See Contrast table(2)
	97	Grille Unit	See Contrast table(2)
	98	Case Unit	CXB5788
	99	Transistor(Q831,Q921,Q998)	2SD2396
	100	Screw	ISS26P055FUC
	101	Holder	See Contrast table(2)
	102	Spacer	See Contrast table(2)
	103	Double Sided Tape	CNM6811

(2) CONTRAST TABLE

DEH-P8200R/X1N/UC and DEH-P8250/X1N/ES are constructed the same except for the following:

Mark No.	Symbol and Description	Part No.	
		DEH-P8200R/X1N/UC	DEH-P8250/X1N/ES
16	Panel	CNS5992	CNS5993
18	Tuner Amp Unit	CWM6931	CWM6933
72	Detach Grille Assy	CXB5229	CXB5231
77	Button(F,A)	CAC6337	CAC6338
78	Button(BAND)	CAC6442	CAC6443
80	Button(DISP)	CAC6640	CAC6639
85	Cover	CNS5737	CNS5738
96	Knob Unit	CXB5350	CXB5351
97	Grille Unit	CXB5438	CXB5440
101	Holder	CNC8357	Not used
102	Spacer	CNM6482	Not used

2.3 CD MECHANISM MODULE

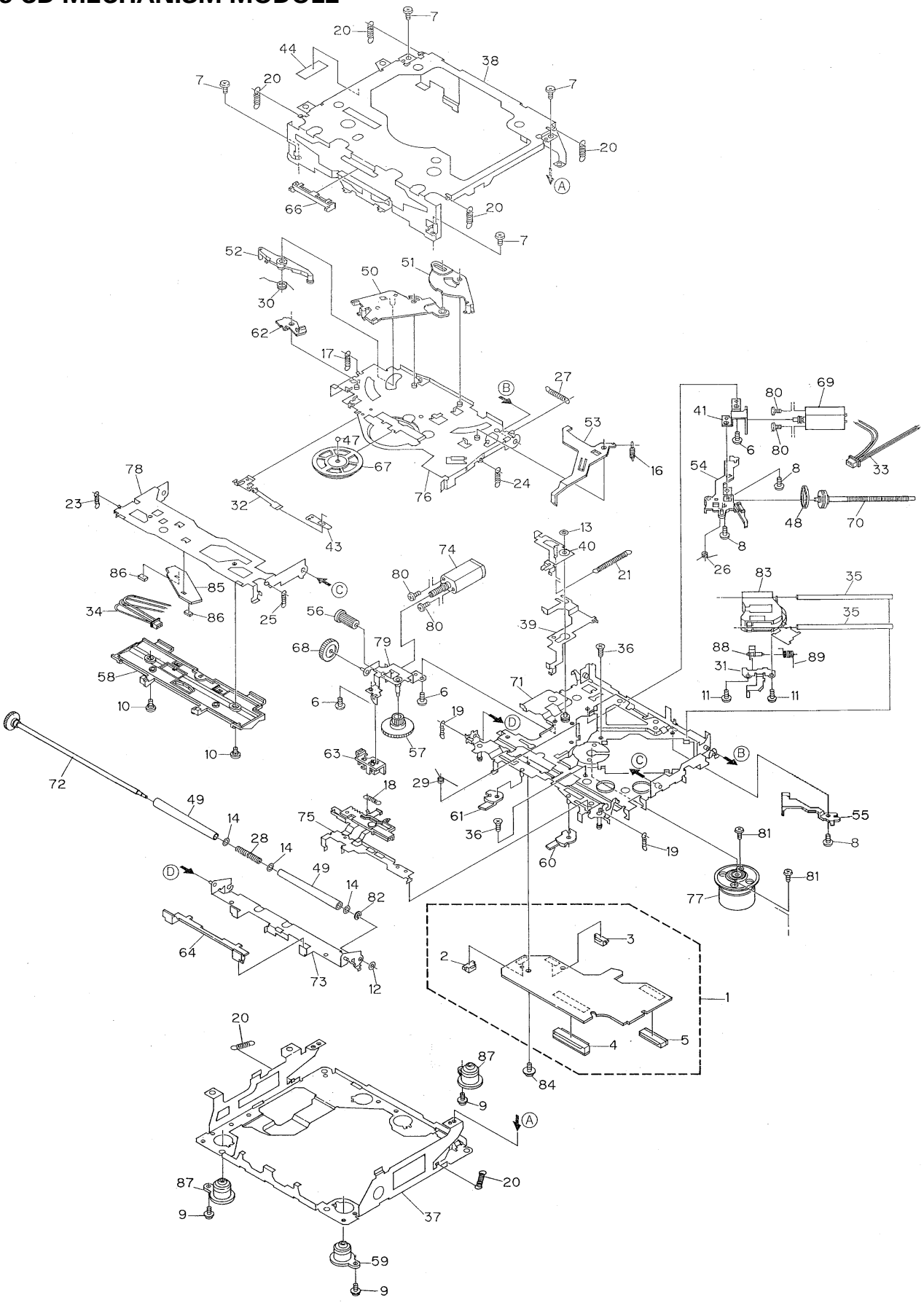

● CD MECHANISM MODULE SECTION PARTS LIST

Mark	No.	Description	Part No.
	1	Control Unit	CWX2419
	2	Connector(CN802)	CKS2192
	3	Connector(CN801)	CKS2193
	4	Connector(CN701)	CKS2777
	5	Connector(CN101)	CKS3486
	6	Screw	BMZ20P030FMC
	7	Screw	BSZ20P040FMC
	8	Screw(M2x3)	CBA1077
	9	Screw(M2x5)	EBA1028
	10	Screw	CBA1243
	11	Screw(M2x4)	CBA1362
	12	Washer	CBF1037
	13	Washer	CBF1038
	14	Washer	CBF1060
	15	•••••	
	16	Spring	CBH2079
	17	Spring	CBH2117
	18	Spring	CBH2314
	19	Spring	CBH2110
	20	Spring	CBH2282
	21	Spring	CBH2318
	22	•••••	
	23	Spring	CBH2324
	24	Spring	CBH2118
	25	Spring	CBH2161
	26	Spring	CBH2163
	27	Spring	CBH2189
	28	Spring	CBH2377
	29	Spring	CBH2260
	30	Spring	CBH2262
	31	Bracket	CNC8568
	32	Spring	CBL1369
	33	Connector	CDE5531
	34	Connector	CDE5532
	35	Shaft	CLA3304
	36	Screw(M2.6x6)	CBA1458
	37	Frame	CNC8565
	38	Frame	CNC8749
	39	Lever	CNC7546
	40	Arm	CNC8663
	41	Bracket	CNC8567
	42	•••••	
	43	Spacer	CNM3315
	44	Sheet	CNM6659
	45	•••••	
	46	•••••	
	47	Ball	CNR1189
	48	Belt	CNT1086
	49	Roller	CNV4509
	50	Arm	CNV6037
	51	Arm	CNV5247
	52	Arm	CNV5248
	53	Arm	CNV5249
	54	Guide	CNV5254
	55	Guide	CNV5255
	56	Gear	CNV5257
	57	Gear	CNV5256
	58	Guide	CNV6272
	59	Damper	CNV6010
	60	Arm	CNV6096
	61	Arm	CNV6031
	62	Arm	CNV6211
	63	Guide	CNV6012
	64	Guide	CNV5510
	65	•••••	
	66	Guide	CNV5751
	67	Clamper	CNV6013
	68	Gear	CNV5813
	69	Motor Unit(M1)	CXB2190
	70	Screw Unit	CXB5892
	71	Chassis Unit	CXB4797
	72	Gear Unit	CXB4728
	73	Arm Unit	CXB5753
	74	Motor Unit(M2)	CXB2195
	75	Lever Unit	CXB4730
	76	Arm Unit	CXB4731
	77	Motor Unit(M3)	CXB2562
	78	Arm Unit	CXB4732
	79	Bracket Unit	CXB4795
	80	Screw	JFZ20P025FMC
	81	Screw	JGZ17P025FZK
	82	Washer	YE20FUC
	83	Pickup Unit(Service)(P8)	CXX1285
	84	Screw	IMS26P030FMC
*	85	PCB	CNX2982
	86	Photo-transistor(Q1, 2)	CPT230SX-TU
	87	Damper	CNV6011
	88	Rack	CNV6014
	89	Spring	CBH2315

3. BLOCK DIAGRAM AND SCHEMATIC DIAGRAM

3.1 BLOCK DIAGRAM (DEH-P8200R/X1N/UC)

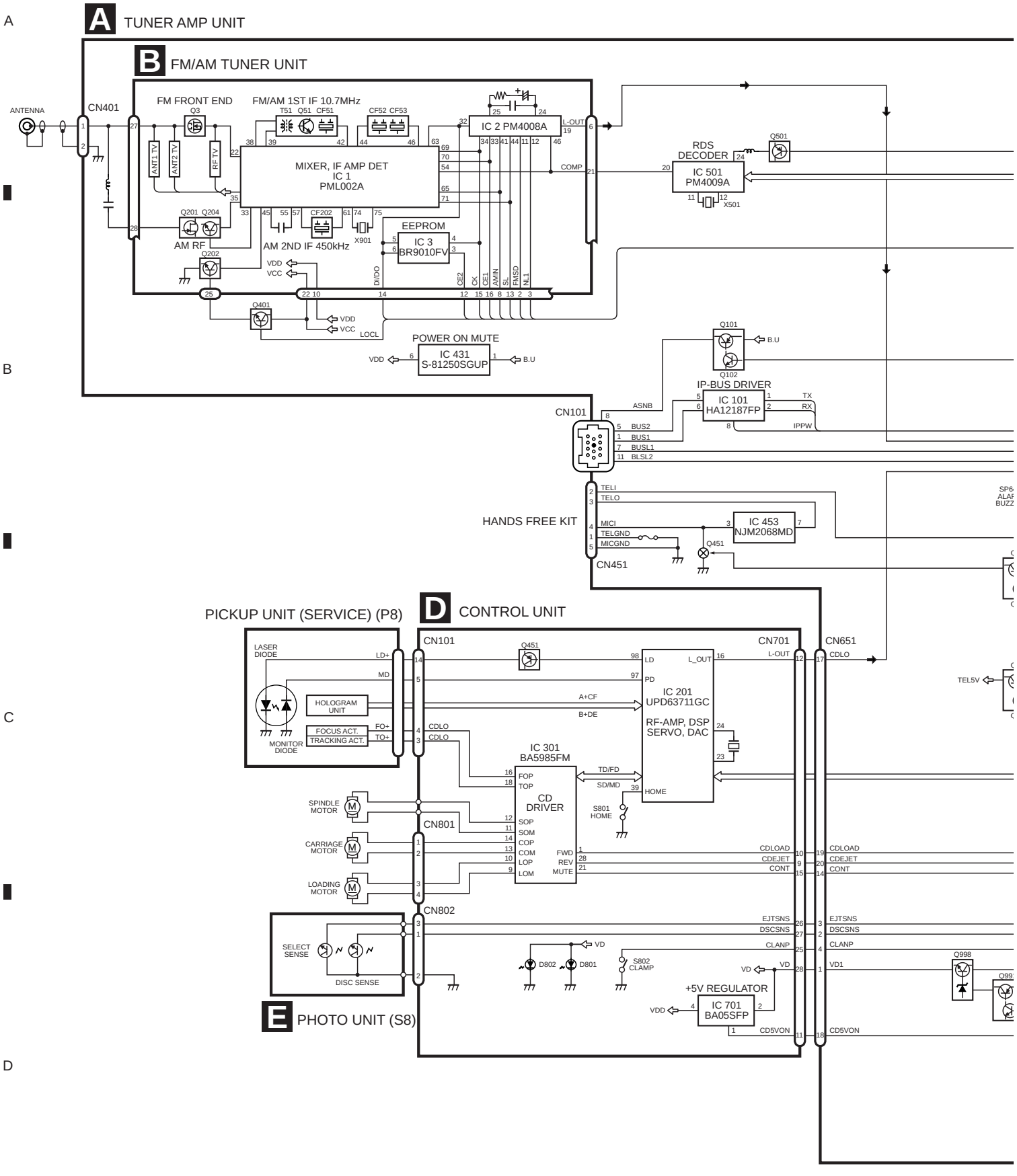

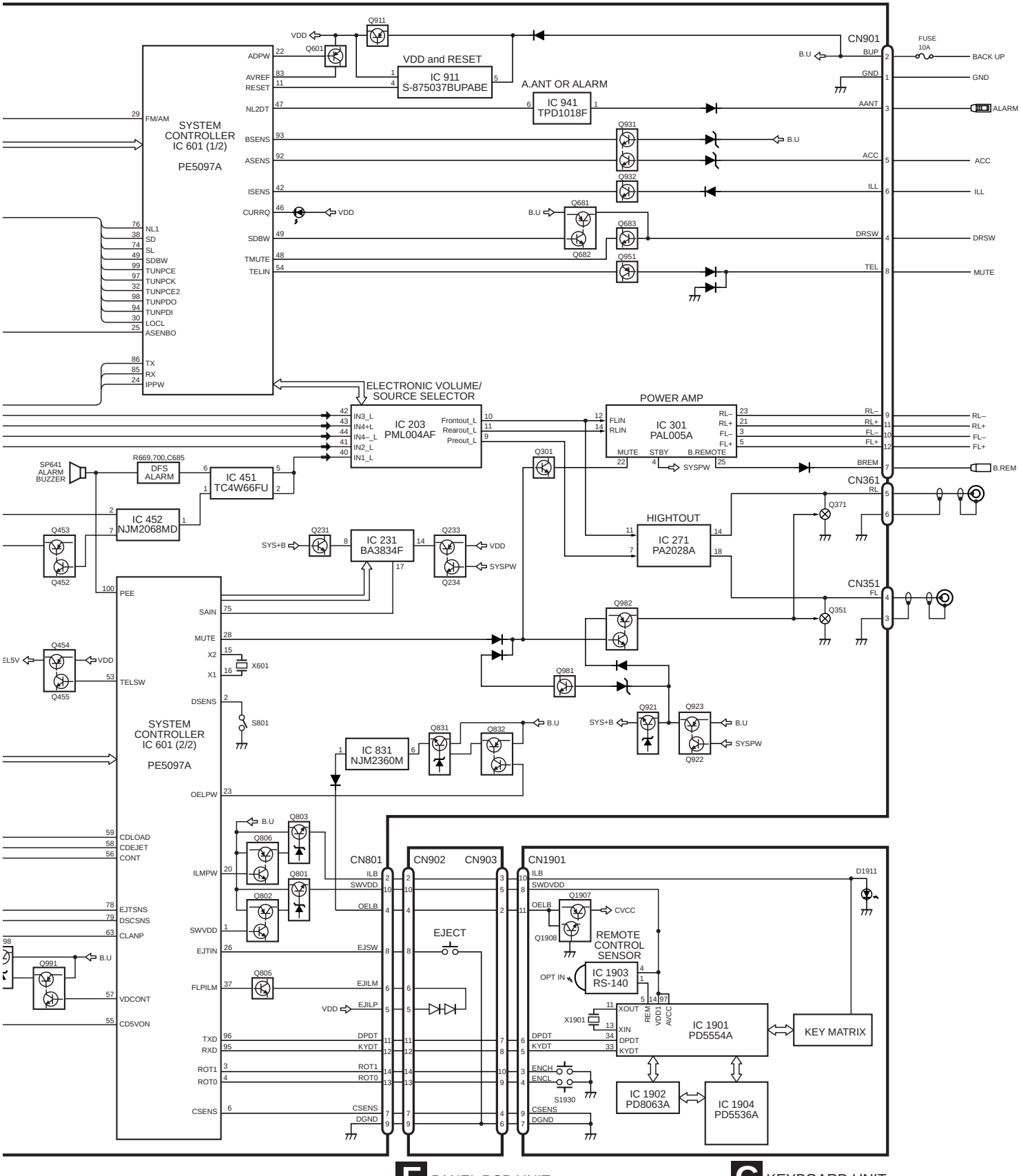
SYSTEM CONTROLLER IC 601 (1/2)
PE5097A
SYSTEM CONTROLLER IC 601 (2/2)
PE5097A
VDD and RESET
IC 911 S-875037BUPABE
A.ANT OR ALARM
IC 941 TPD1018F
CN901
FUSE 10A
BACK UP
GND
ALARM
ACC
ILL
DRSW
MUTE
ELECTRONIC VOLUME/ SOURCE SELECTOR
IC 203 PML004AF
POWER AMP
IC 301 PAL005A
IC 451 TC4W66FU
IC 452 NJM2068MD
IC 231 BA3834F
IC 271 PA2028A
HIGHTOUT
CN361
CN351
IC 831 NJM2360M
CN801
CN902
CN903
CN1901
EJECT
REMOTE CONTROL SENSOR
IC 1903 RS-140
IC 1901 PD5554A
KEY MATRIX
IC 1902 PD8063A
IC 1904 PD5536A
F PANEL PCB UNIT
C KEYBOARD UNIT

3.2 OVERALL CONNECTION DIAGRAM(GUIDE PAGE)

Note: When ordering service parts, be sure to refer to "EXPLODED VIEWS AND PARTS LIST" or "ELECTRICAL PARTS LIST".

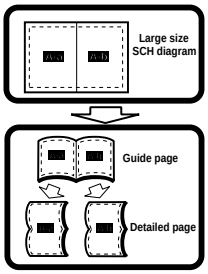

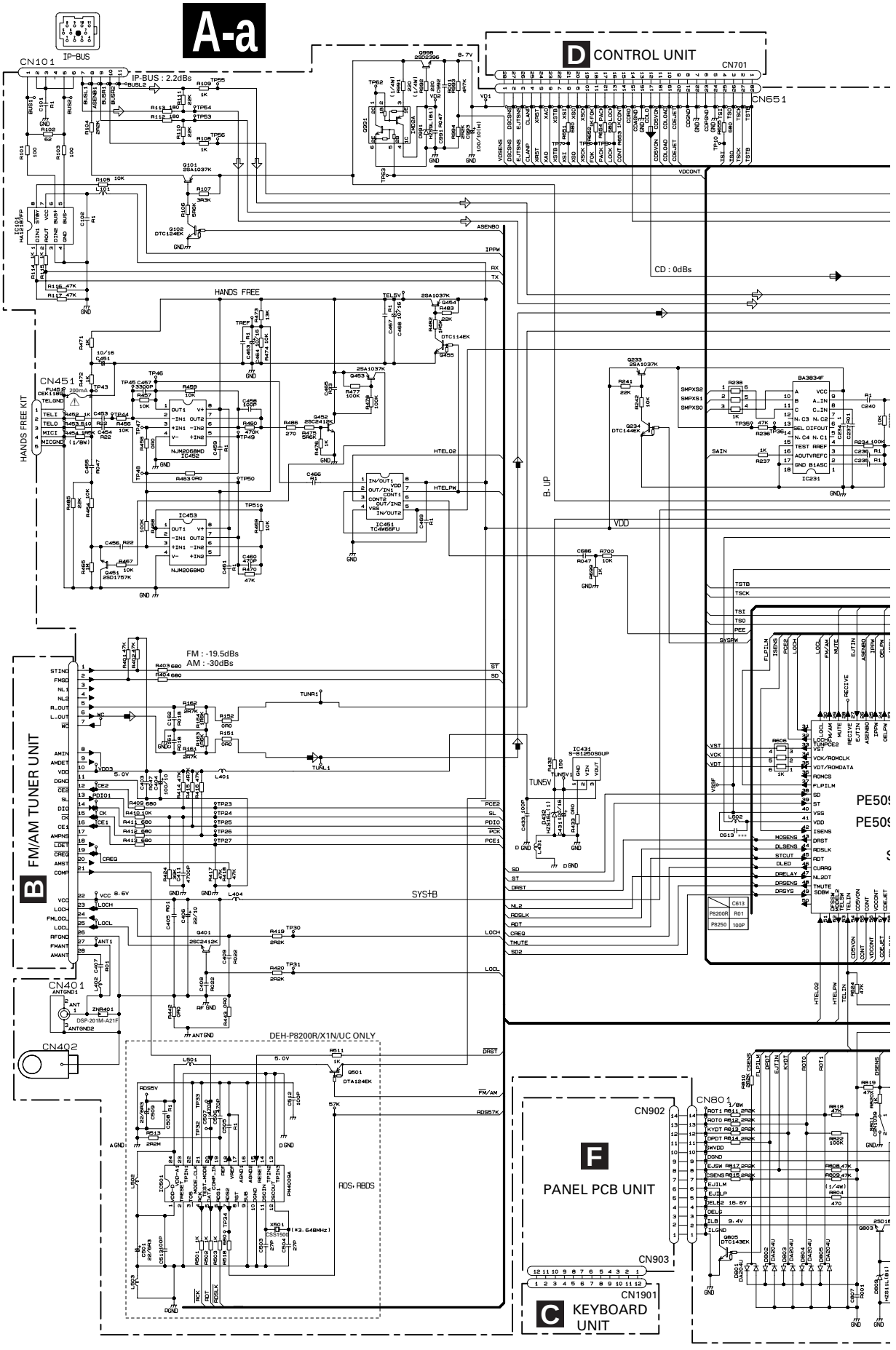

A-b

TUNER SIGNAL
IP-BUS SIGNAL
CD SIGNAL
CD/TUNER/IP-BUS SIGNAL

The ⚠ mark found on some component parts indicates the importance of the safety factor of the part. Therefore, when replacing, be sure to use parts of identical designation.

A TUNER AMP UNIT

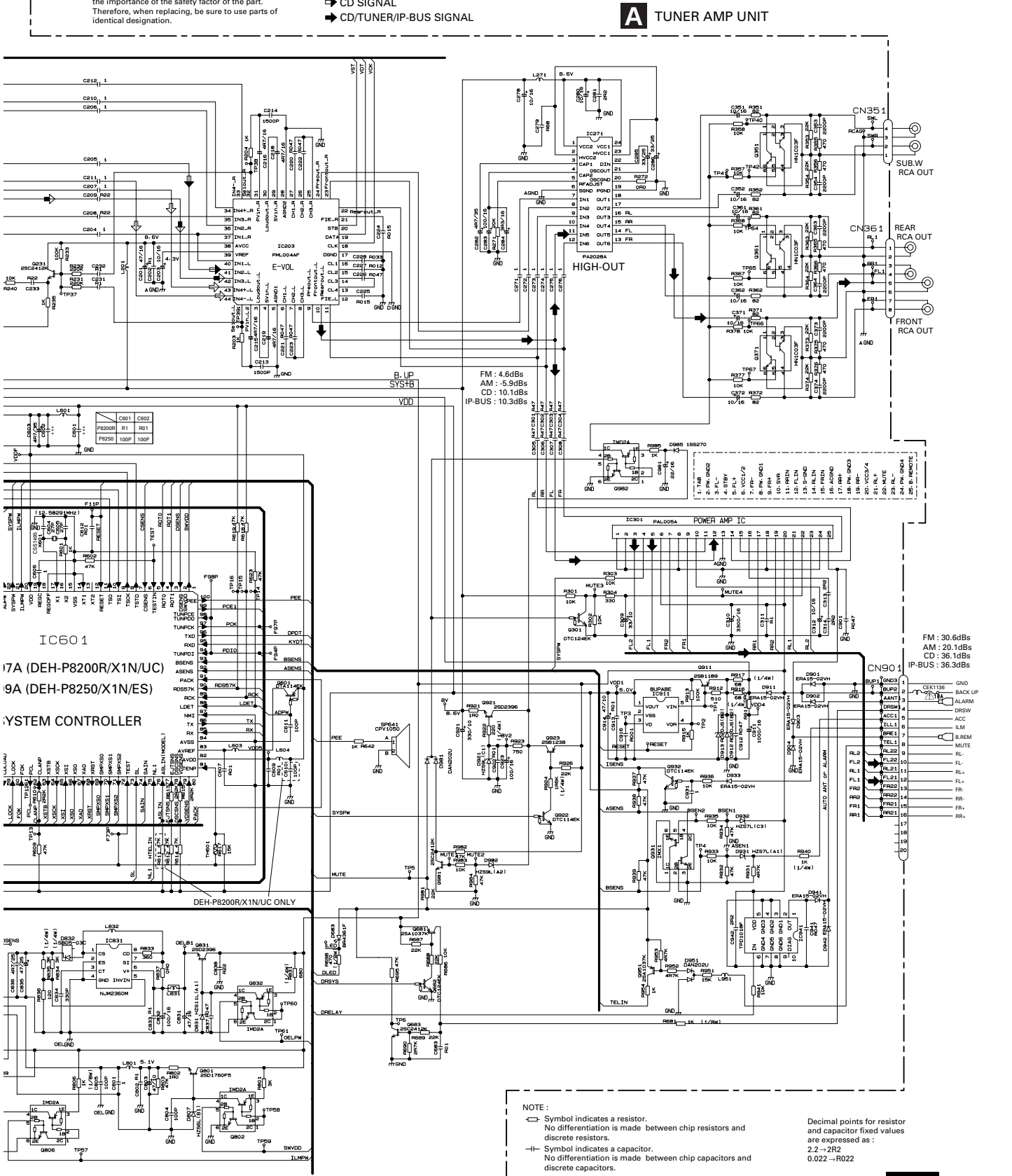

NOTE :
- Symbol indicates a resistor. No differentiation is made between chip resistors and discrete resistors.
- Symbol indicates a capacitor. No differentiation is made between chip capacitors and discrete capacitors.

Decimal points for resistor and capacitor fixed values are expressed as :
2.2→2R2
0.022→R022

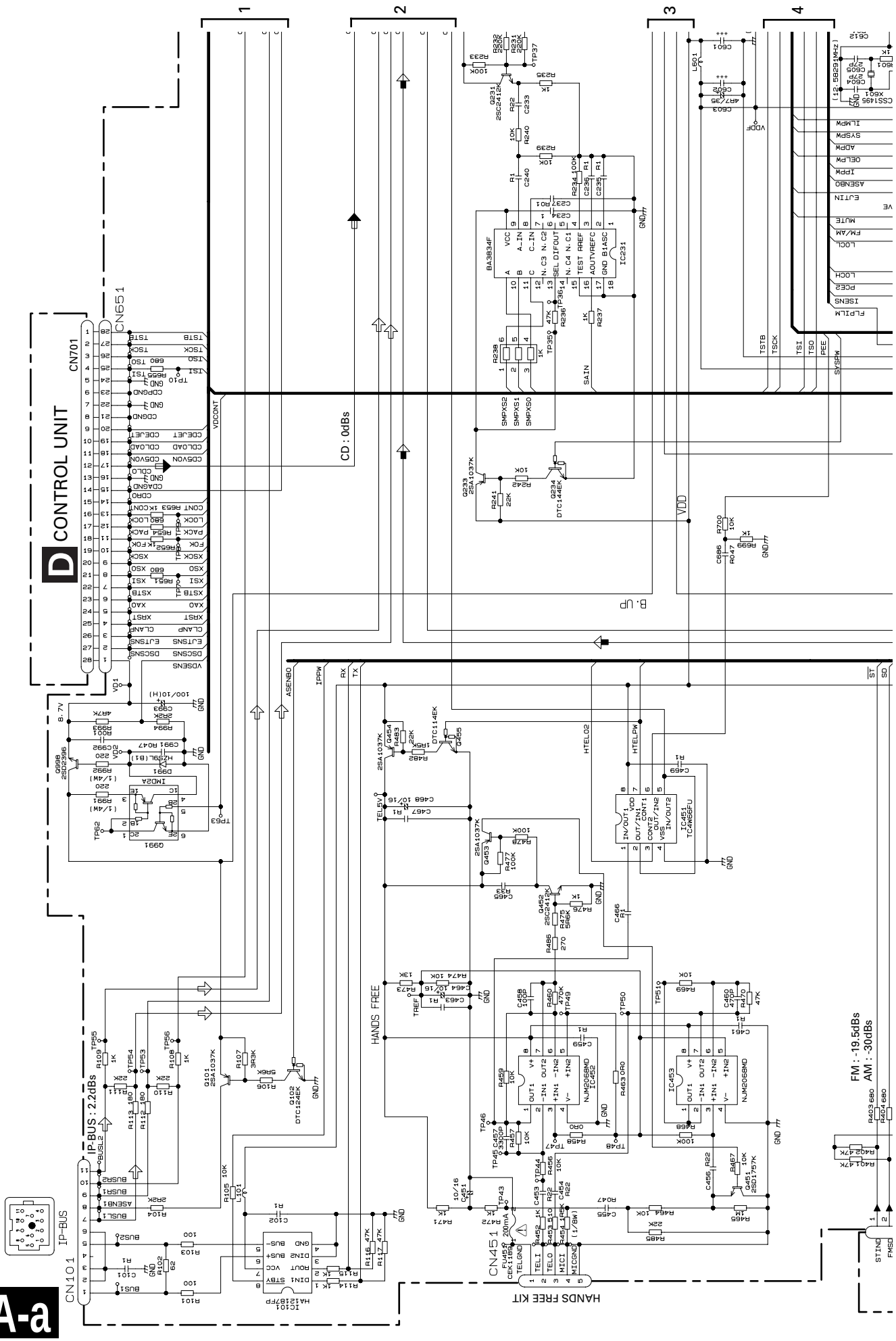
A-b
A-a
D CONTROL UNIT
CN701
CN651
CD : 0dBs
IP-BUS : 2.2dBs
FM : -19.5dBs
AM : -30dBs
HANDS FREE
HANDS FREE KIT
CN1451
CN101
IP-BUS
VDD
B. UP
SAIN
SMPXS0
SMPXS1
SMPXS2
IC231
BA3834F
IC451
TC4M5PFU
IC453
NJM2068MD
IC1451
HA12187FP
Q231
2SC2412K
Q233
2SA1037K
Q234
DTC144EK
Q451
2SA1037K
Q452
2SC2412K
Q453
2SA1037K
Q454
2SA1037K
Q455
DTC114EK
Q991
2SB596
Q992
M62364L(B1)
Q993
IMD2A
Q101
2SA1037K
Q102
DTC124EK
TSTB
TSCK
TSO
TSI
CDPGND
CDGND
CDEJET
CDLOAD
CDLO
CDSVON
CDAGND
CDRO
CONT
LOCK
PACK
FOK
XSCK
XSO
XSI
XSTB
XAO
XRST
CLANP
EJTSNS
DSCSNS
VDCONT
VDSENS
VDD
ASENBO
IPPW
RX
TX
ST
SD
HTELO2
HTELPW
TELBUS
TELO
TELI
MICI
MICGND
TELGND
STBY
STIN
FMSD
BUSLS2
BUSS1
BUSS2
ASENB1
TP43
TP44
TP45
TP46
TP47
TP48
TP49
TP50
TP51
TP52
TP53
TP54
TP55
TP56
TP62
TP63
TP64
TP65
TP66
TP67
TP68
TP69
TP70
TP71
TP72
TP73
TP74
TP75
TP76
TP77
TP78
TP79
TP80
TP81
TP82
TP83
TP84
TP85
TP86
TP87
TP88
TP89
TP90
TP91
TP92
TP93
TP94
TP95
TP96
TP97
TP98
TP99
TP100
TP101

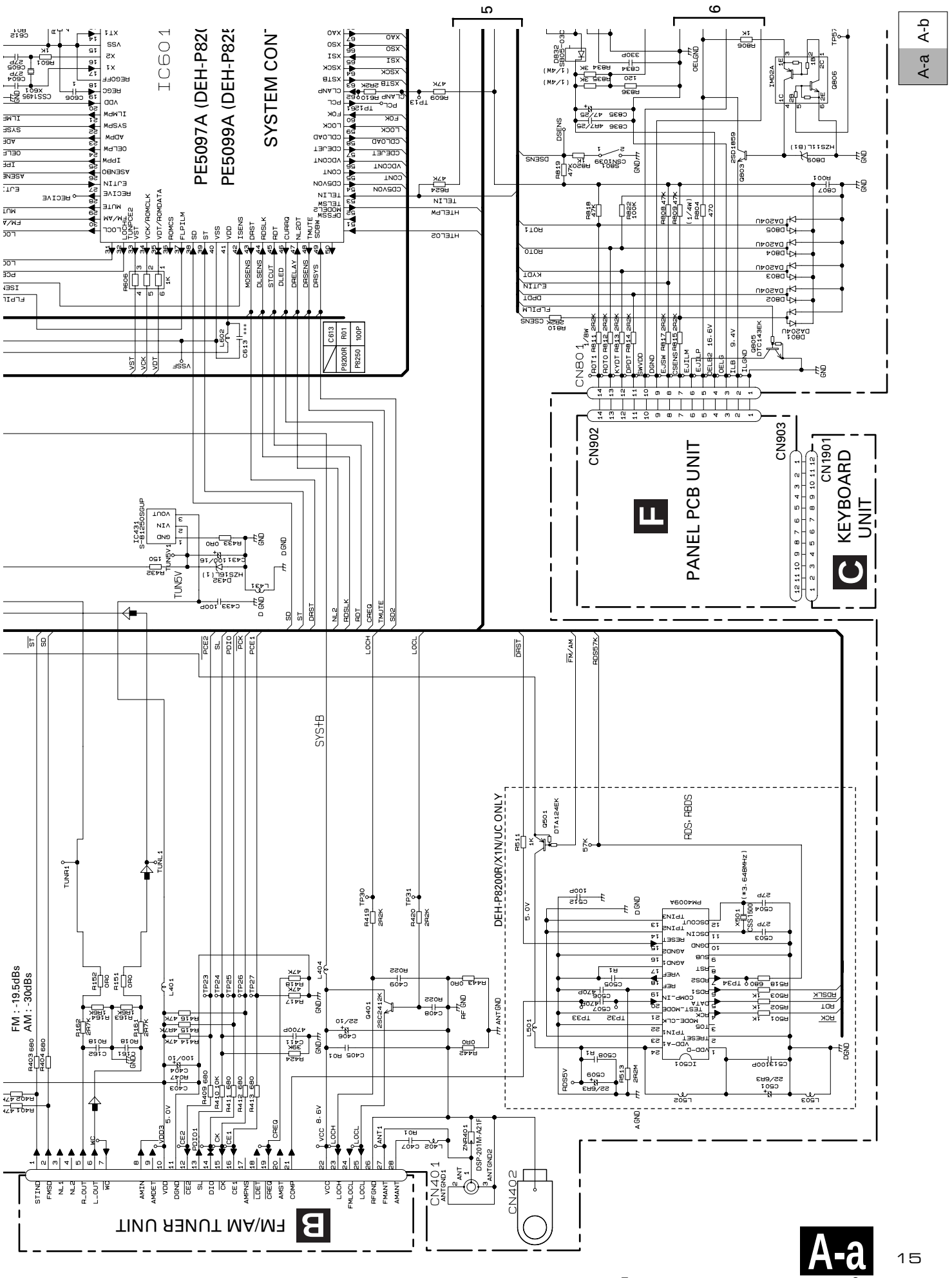
PE5097A (DEH-P82(
PE5099A (DEH-P82
SYSTEM CON
IC601
PANEL PCB UNIT
KEYBOARD UNIT
FM/AM TUNER UNIT
DEH-P8200R/X1N/UC ONLY
SYSHB
CN902
CN903
CN1901
CN801
CN401
CN402
A-b
A-a

A-a A-b

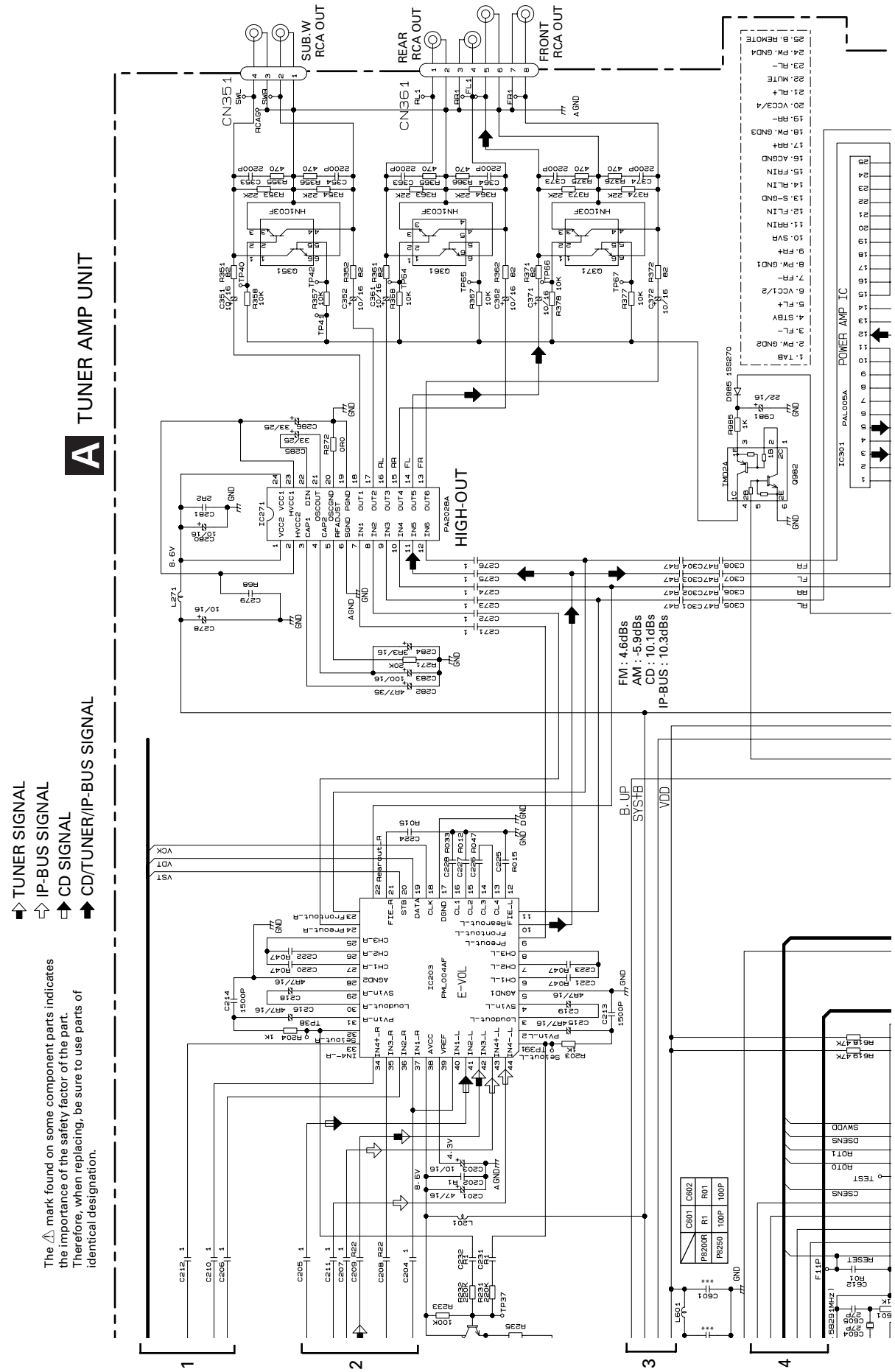
A TUNER AMP UNIT
SUB.W RCA OUT
REAR RCA OUT
FRONT RCA OUT
CN351
CN361
HIGH-OUT
IC271
PA2028A
IC203
PML004AF
E-VOL
POWER AMP IC
IC301
PAL005A
FM : 4.6dBs
AM : -5.9dBs
CD : 10.1dBs
IP-BUS : 10.3dBs
B.UP
SYS+B
VDD
TUNER SIGNAL
IP-BUS SIGNAL
CD SIGNAL
CD/TUNER/IP-BUS SIGNAL
The ⚠ mark found on some component parts indicates the importance of the safety factor of the part. Therefore, when replacing, be sure to use parts of identical designation.

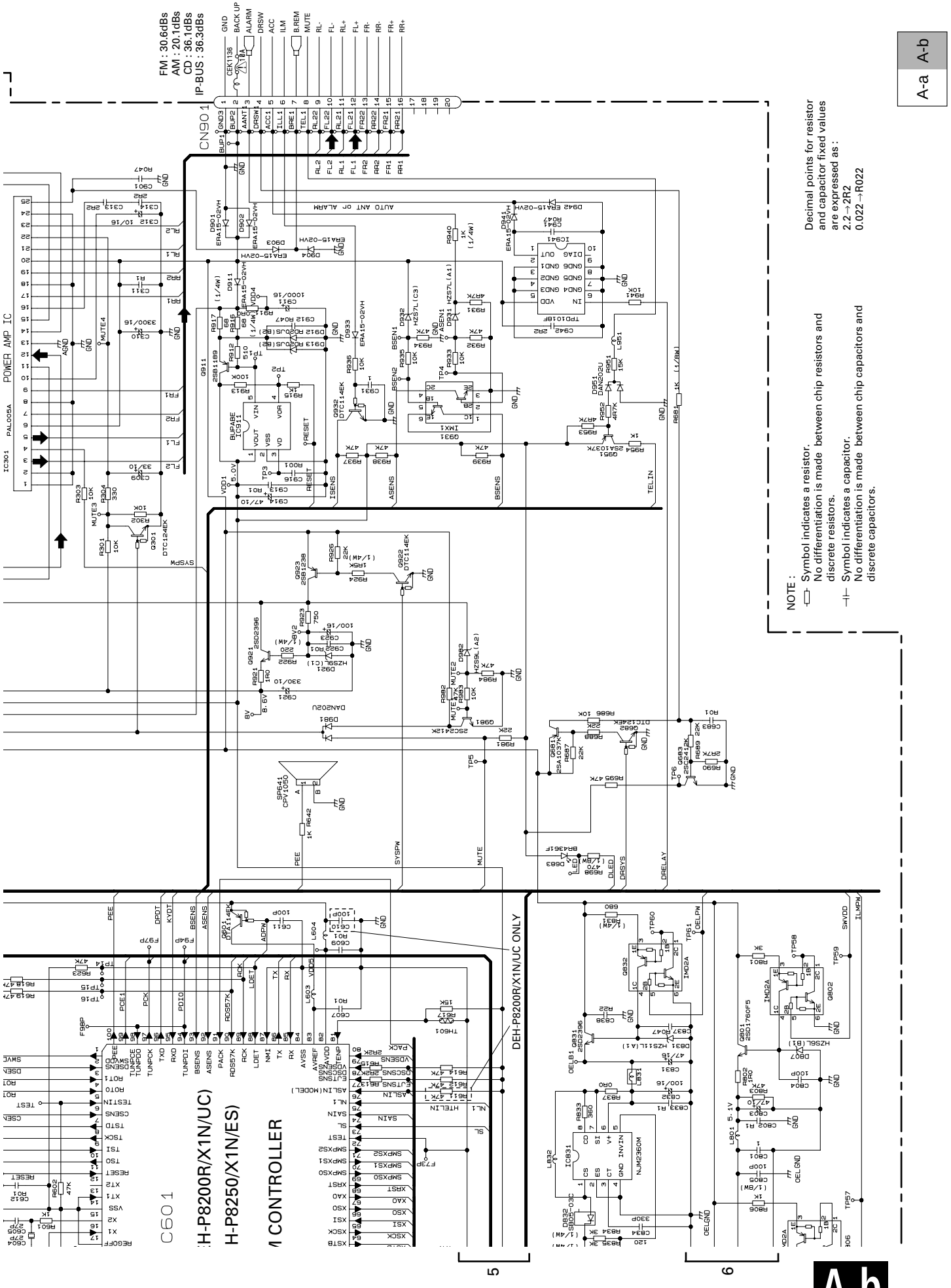
FM : 30.6dBs
AM : 20.1dBs
CD : 36.1dBs
IP-BUS : 36.3dBs
CN901
GND
BACK UP
ALARM
DRSW
ACC
ILM
B.REM
MUTE
RL-
FL-
RL+
FL+
FR-
RR-
FR+
RR+
POWER AMP IC
IC301
PAL005A
AUTO ANT OF ALARM
SYSPW
MUTE
PEE
DRELAY
DRSYS
DLED
DEH-P8200R/X1N/UC ONLY
DEH-P8200R/X1N/UC)
H-P8250/X1N/ES)
M CONTROLLER
C601
Decimal points for resistor and capacitor fixed values are expressed as :
2.2→2R2
0.022→R022
NOTE :
Symbol indicates a resistor. No differentiation is made between chip resistors and discrete resistors.
Symbol indicates a capacitor. No differentiation is made between chip capacitors and discrete capacitors.
A-a A-b
A-b
17

3.3 FM/AM TUNER UNIT

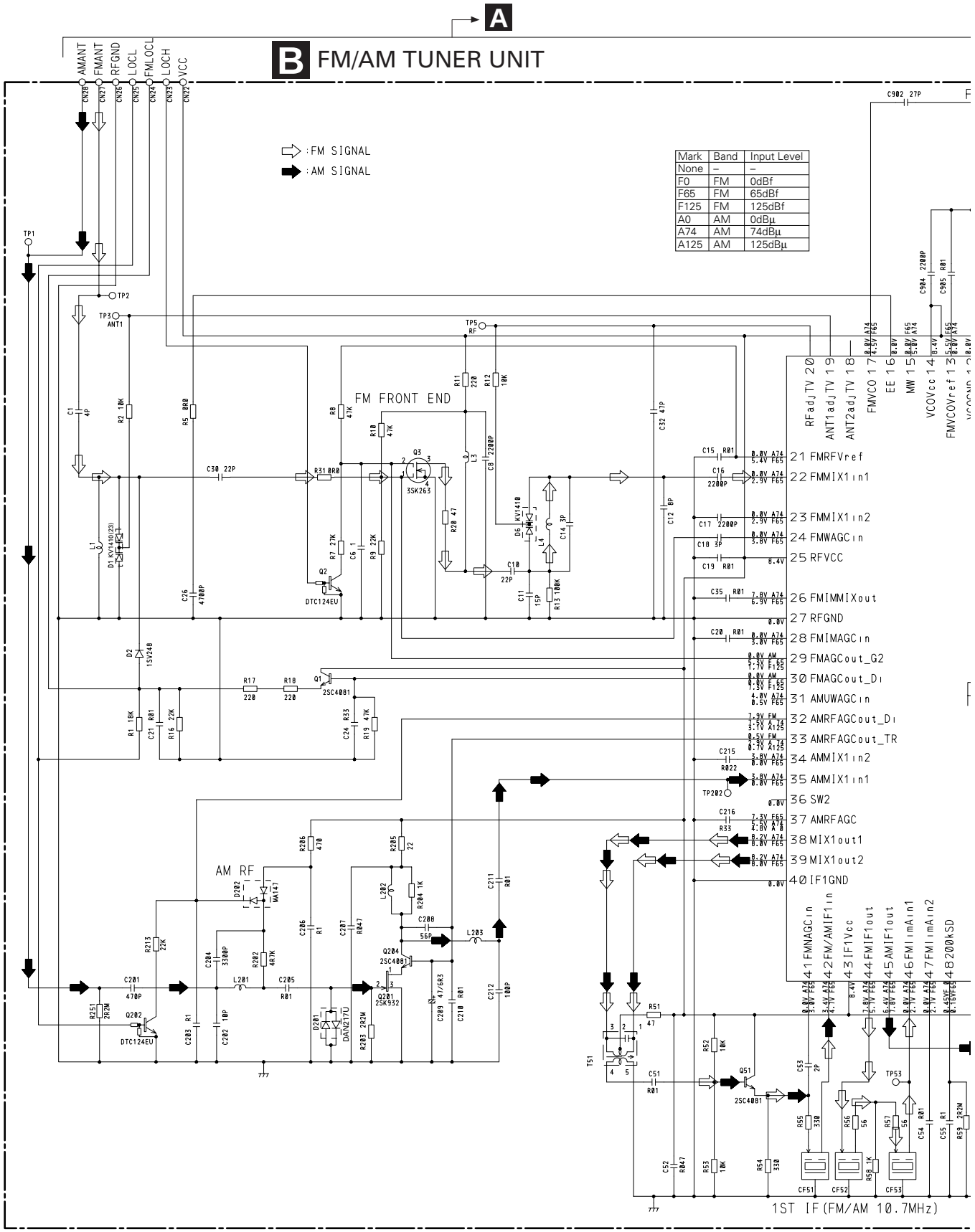

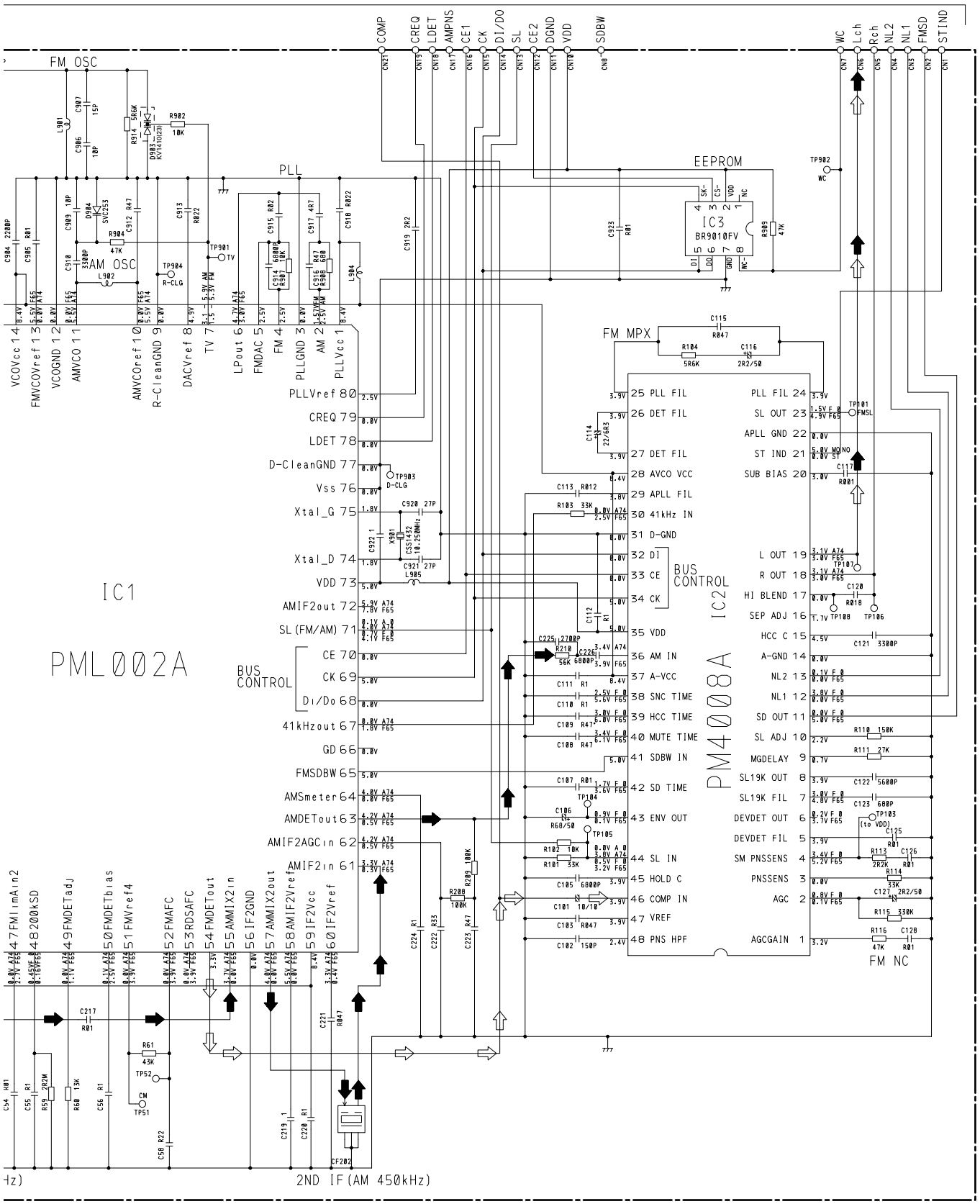
IC1
PML002A
PM4008A IC2
IC3
BR9010FV
EEPROM
FM OSC
AM OSC
PLL
FM MPX
BUS CONTROL
FM NC
2ND IF(AM 450kHz)

3.4 KEYBOARD UNIT

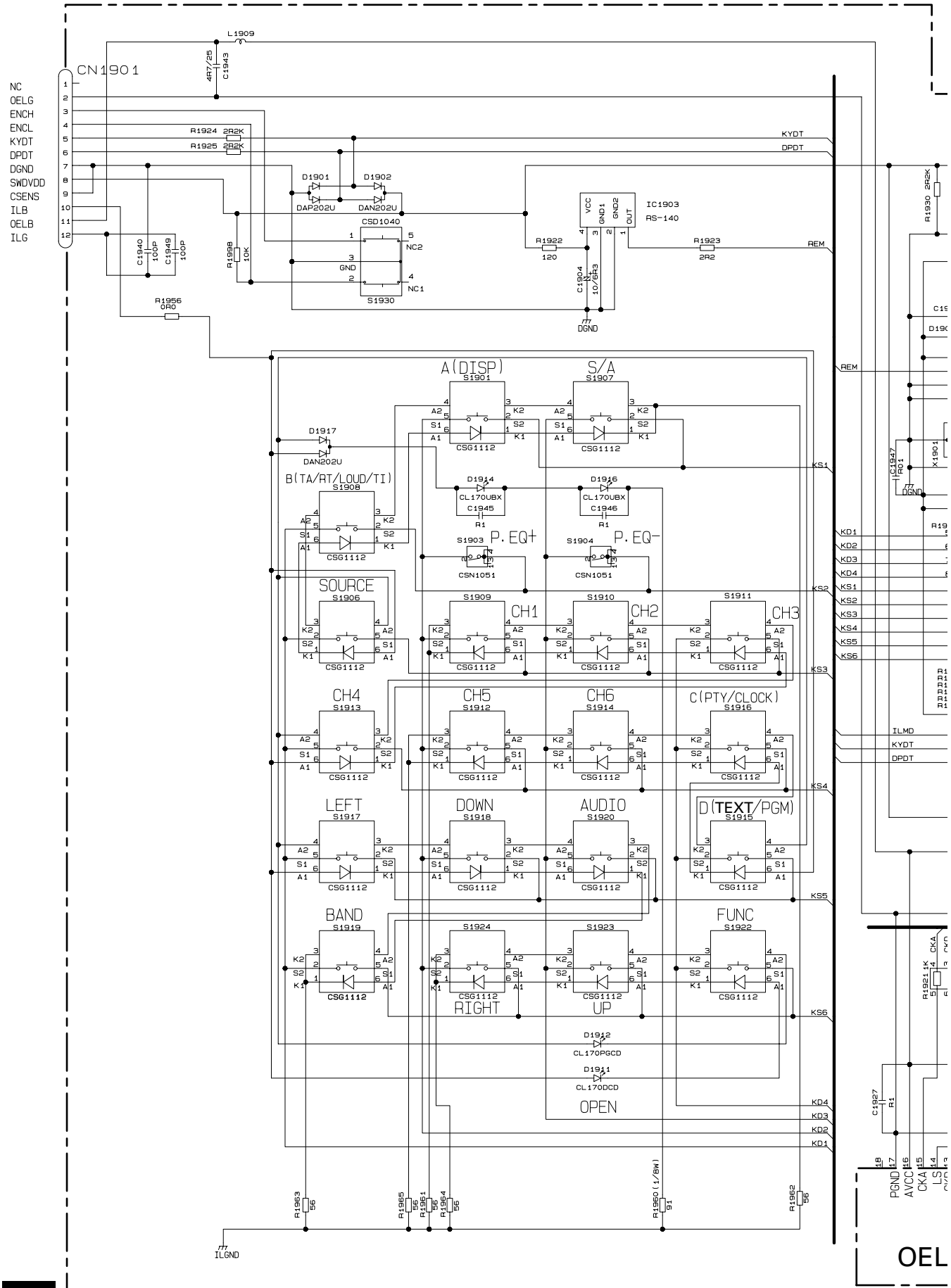

C KEYBOARD UNIT

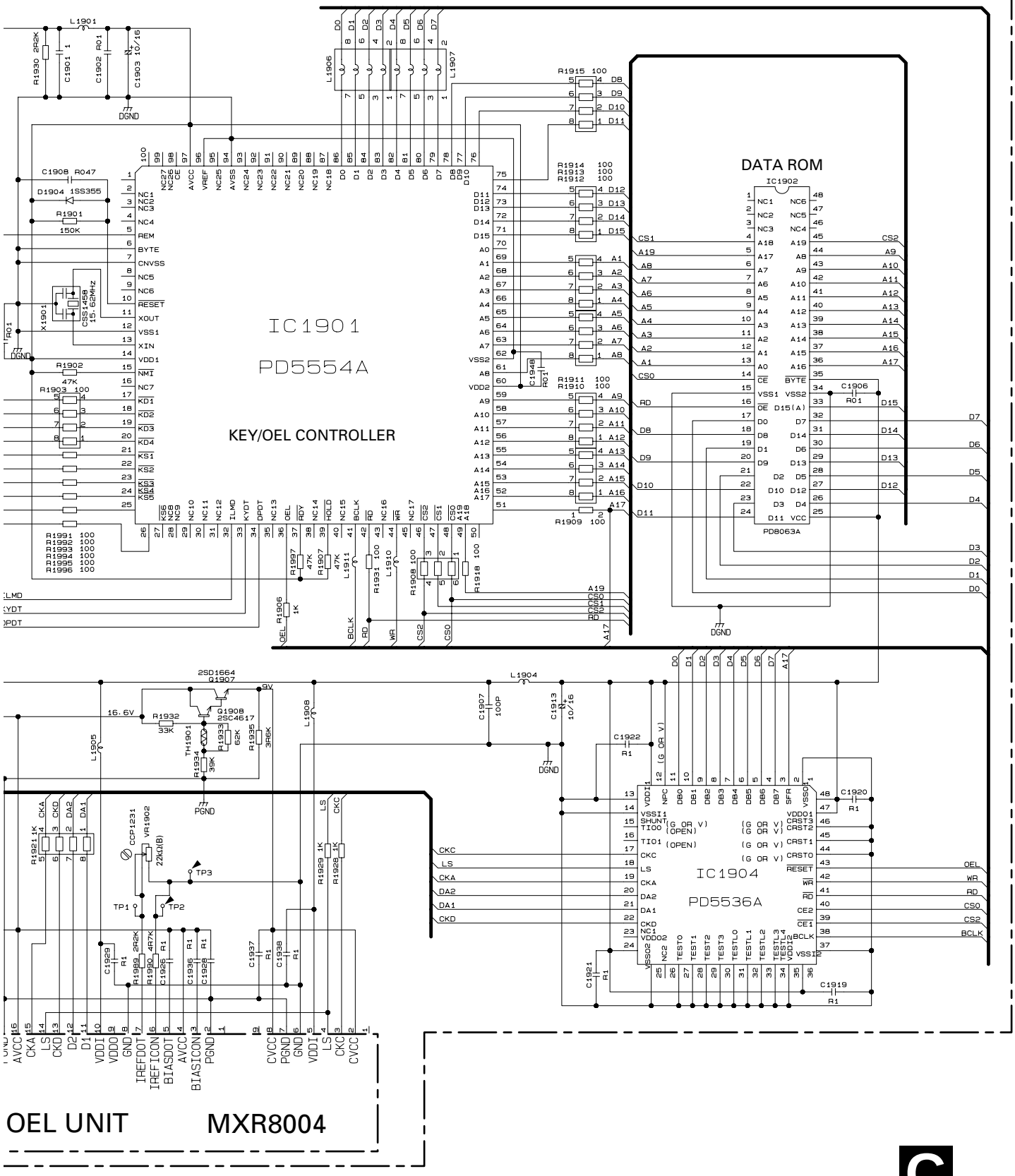

3.5 CD MECHANISM MODULE

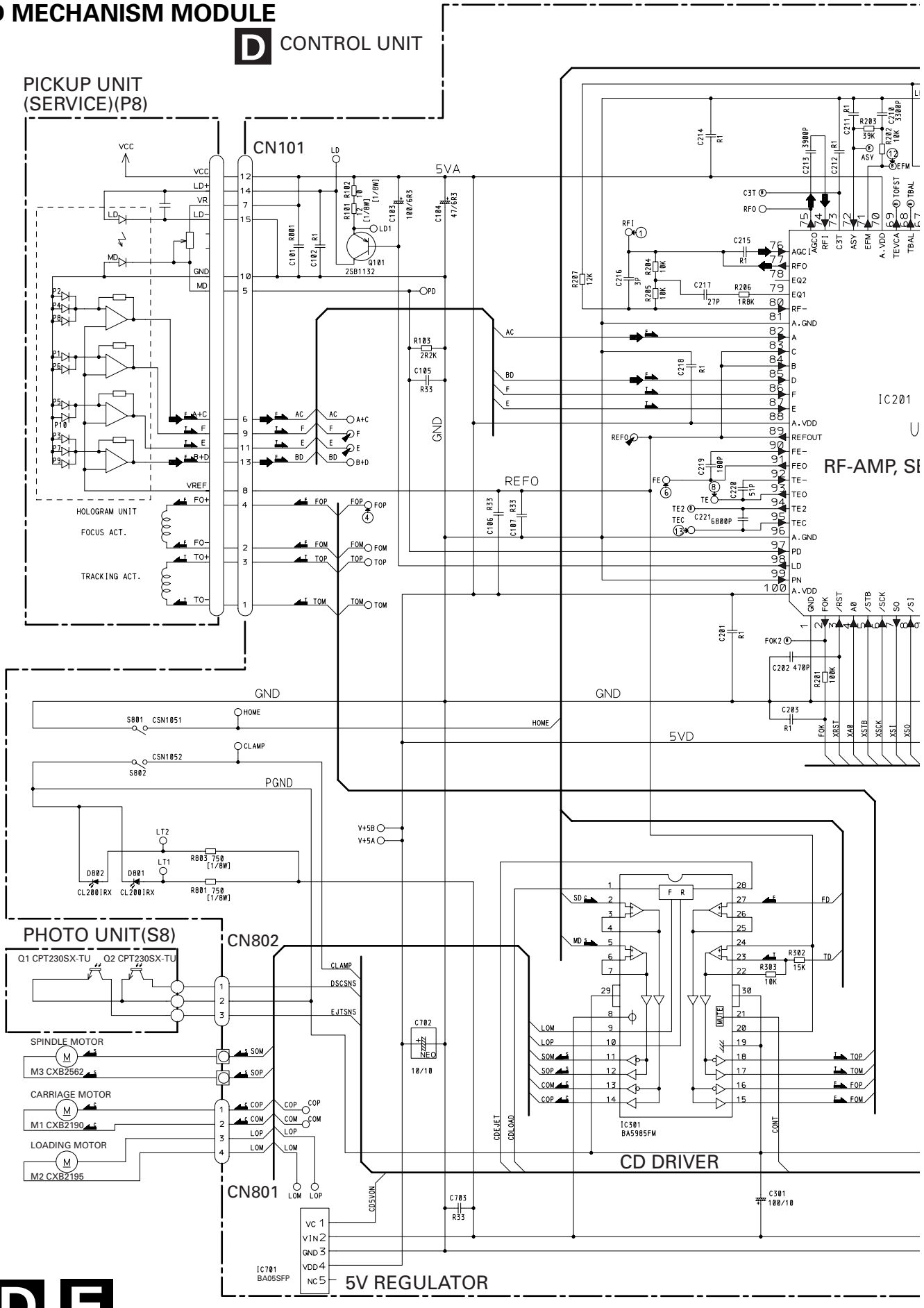

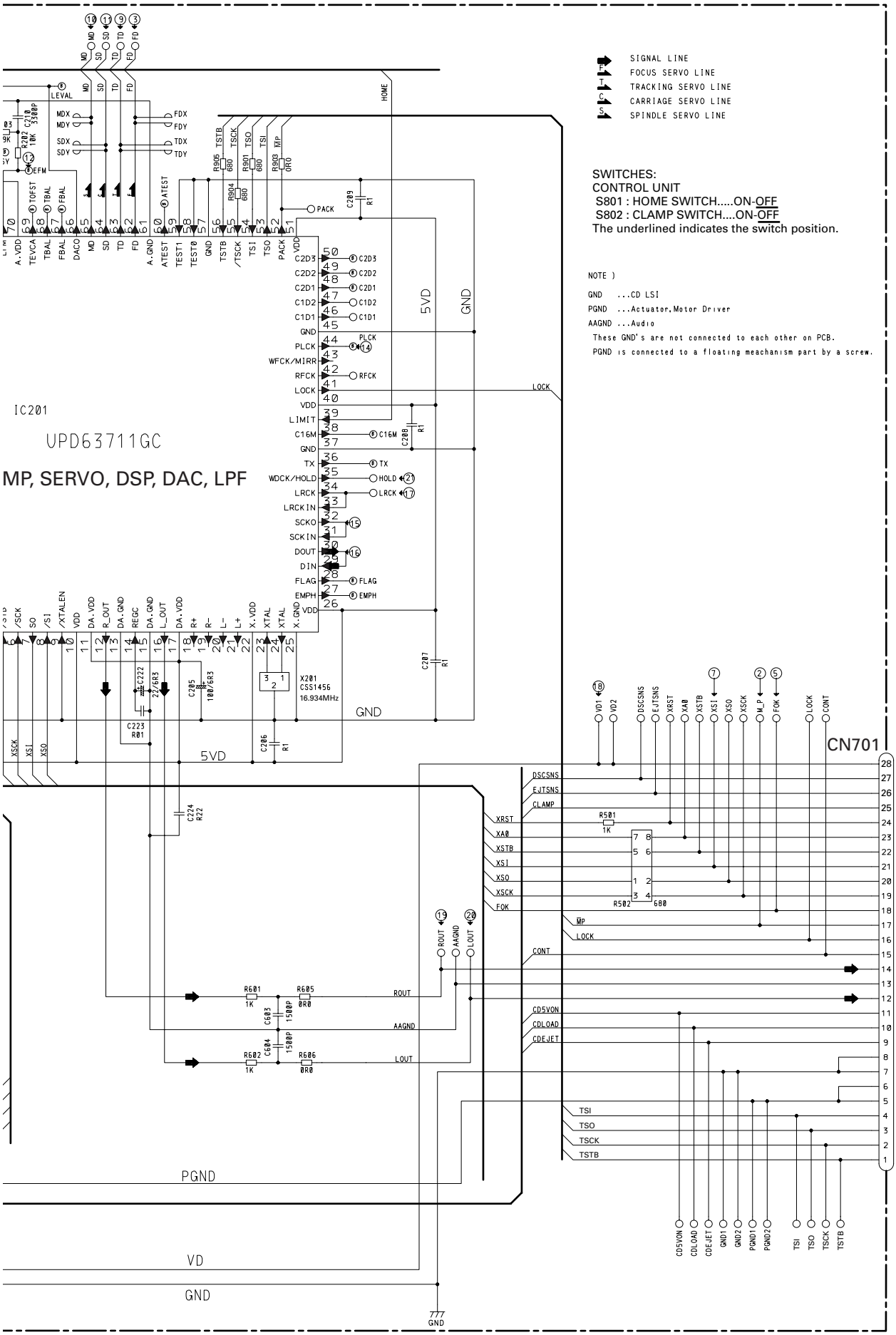
SIGNAL LINE
FOCUS SERVO LINE
TRACKING SERVO LINE
CARRIAGE SERVO LINE
SPINDLE SERVO LINE
SWITCHES:
CONTROL UNIT
S801 : HOME SWITCH.....ON-OFF
S802 : CLAMP SWITCH....ON-OFF
The underlined indicates the switch position.
NOTE)
GND ...CD LSI
PGND ...Actuator, Motor Driver
AAGND ...Audio
These GND's are not connected to each other on PCB.
PGND is connected to a floating meachanism part by a screw.
IC201
UPD63711GC
MP, SERVO, DSP, DAC, LPF
X201
CSS1456
16.934MHz
5VD
GND
PGND
VD
CN701
CN651

Note:1. The encircled numbers denote measuring pointes in the circuit diagram.
2. Reference voltage
REFO:2.5V

● Waveforms

① RFI 0.5V/div. 0.5µs/div.
Normal mode: play

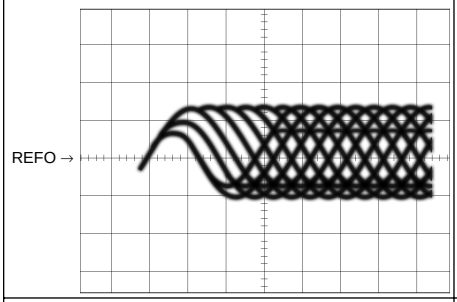

① CH1: RFI 1V/div. 0.5ms/div.
② CH2: MIRR 5V/div.
Test mode: Tracking open

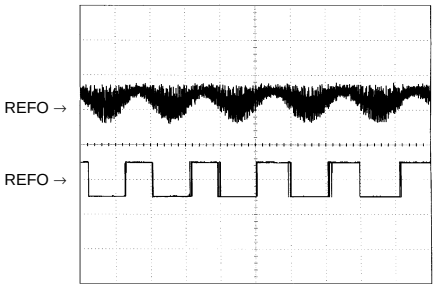

① CH1: RFI 1V/div. 0.5ms/div.
② CH2: MIRR 5V/div.
Normal mode: The defect part passes 800µm

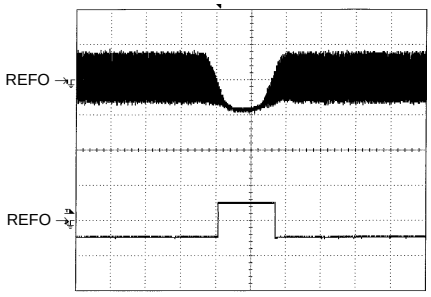

③ CH1: FD 0.5V/div. 0.2s/div.
④ CH2: FO+ 2V/div.
Test mode: No disc, Focus close

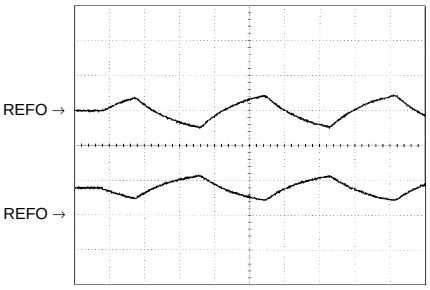

③ CH1: FD 0.5V/div. 0.2s/div.
⑤ CH2: FOK 2V/div.
Normal mode: Focus close

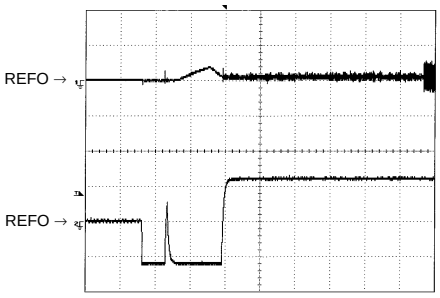

⑥ CH1: FE 0.5V/div. 1ms/div.
⑦ CH2: XSI 2V/div.
Normal mode: Focus close

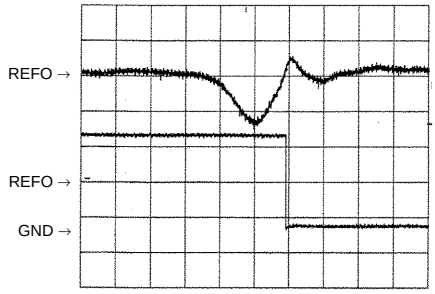

⑧ CH1: TE 0.5V/div. 0.5ms/div.
⑨ CH2: TD 0.5V/div.
Test mode: 32 tracks jump (FWD)

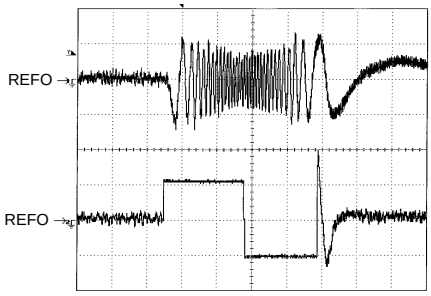

⑧ CH1: TE 0.5V/div. 0.5ms/div.
⑨ CH2: TD 0.5V/div.
Test mode: Single jump (FWD)

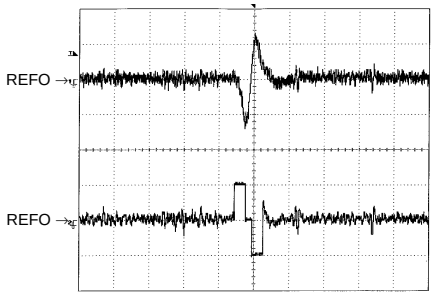

⑧ CH1: TE 0.5V/div. 5ms/div.
⑨ CH2: TD 0.5V/div.
Test mode: 100 tracks jump (FWD)

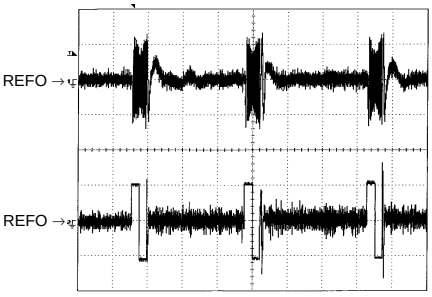

⑥ CH1: FE 0.1V/div. 20ms/div.
③ CH2: FD 0.2V/div.
Normal mode: Play

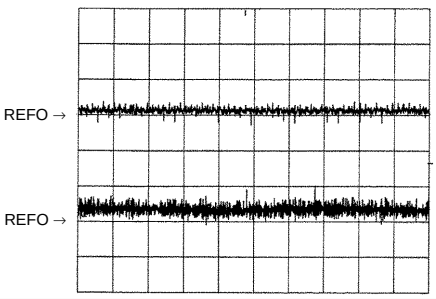

③ CH1: FD 0.5V/div. 0.5s/div.
⑩ CH2: MD 1V/div.
Normal mode: Focus close (12cm)

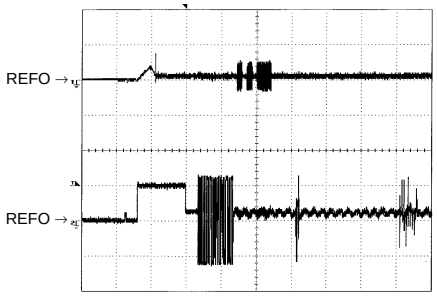

③ CH1: FD 0.5V/div. 0.5s/div.
⑩ CH2: MD 1V/div.
Normal mode: Focus close (8cm)

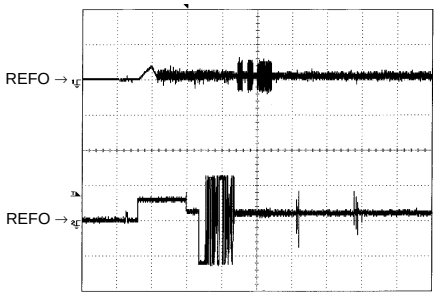

⑧ CH1: TE 0.2V/div. 20ms/div.
⑨ CH2: TD 0.2V/div.
Normal mode: play

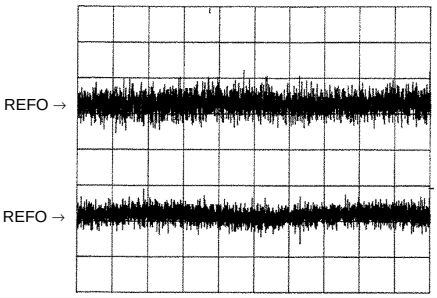

⑧ CH1: TE 0.5V/div. 5ms/div.
⑪ CH2: SD 0.5V/div.
TEST mode: 100 Tracks jump(FWD)

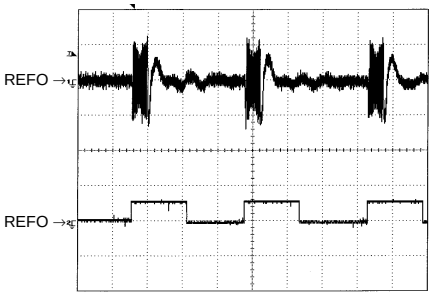

⑩ MD 0.5V/div. 0.1s/div.

Normal mode: Play (12cm)

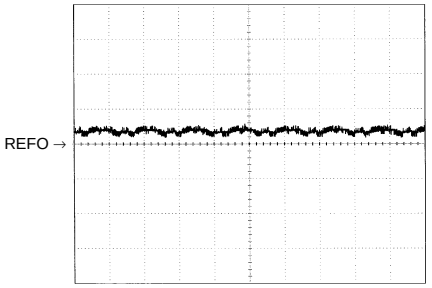

⑩ MD 1V/div. 10ms/div.
Normal mode:
Long Search (12cm)

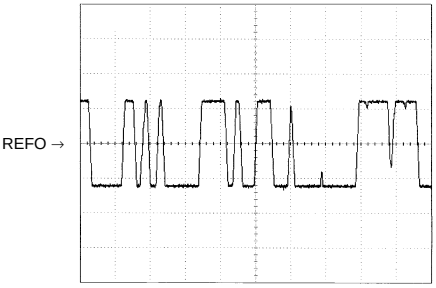

⑫ EFM 1V/div. 5µs/div.

Normal mode: play

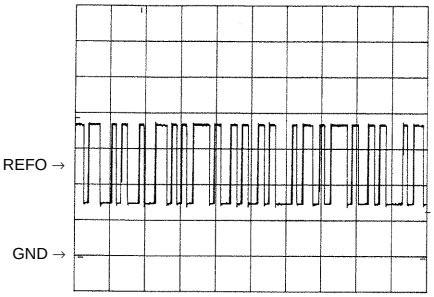

⑧ CH1: TE 1V/div. 2ms/div.
⑬ CH2: TEC 1V/div.
Test mode: Focus close
Tracking open

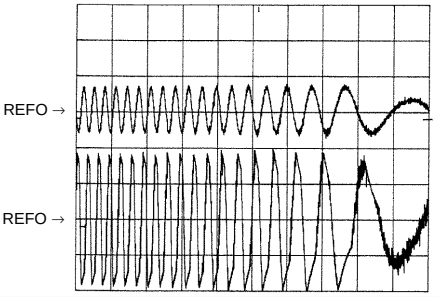

⑧ CH1: TE 0.5V/div. 0.2s/div.
⑥ CH2: FE 0.5V/div.
Normal mode: AGC after focus close

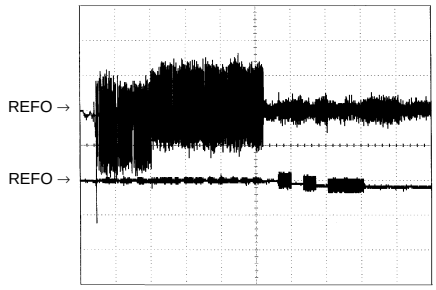

⑭ PLCK 2V/div. 0.5µs/div.

Normal mode: play

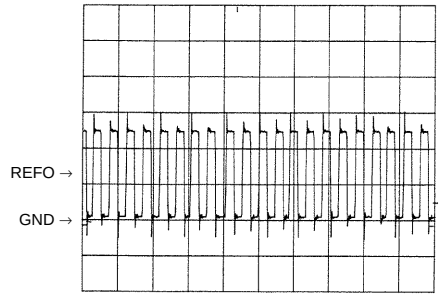

⑮ SCKO 2V/div. 1µs/div.

Normal mode: play

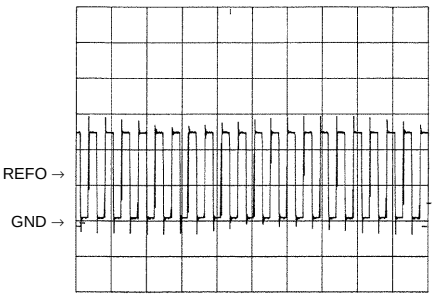

⑯ Dout 2V/div. 10µs/div.

Normal mode: play

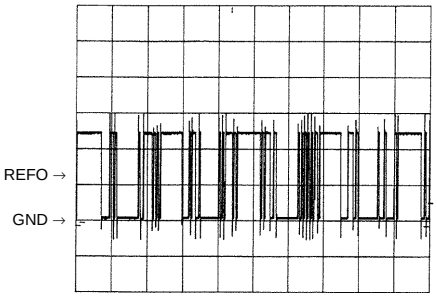

⑰ LRCK 2V/div. 20µs/div.

Normal mode: play

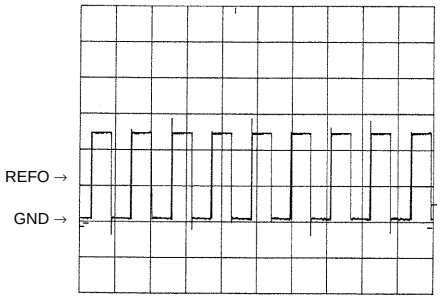

⑱ VD 5V/div. 50ms/div.

Normal mode: No disc

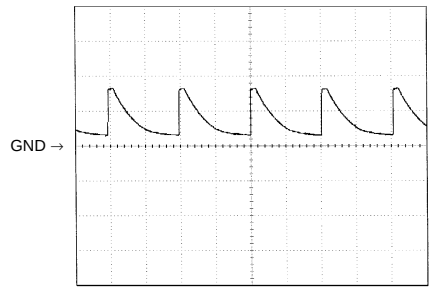

⑲ CH1: R OUT 1V/div. ⑳ CH2: L OUT 1V/div. 0.2ms/div. Normal mode: Play (1kHz 0dB) 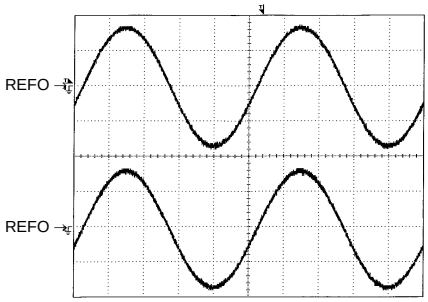	⑥ CH1: FE 0.2V/div. ③ CH2: FD 0.5V/div. 1ms/div. Normal mode: During AGC 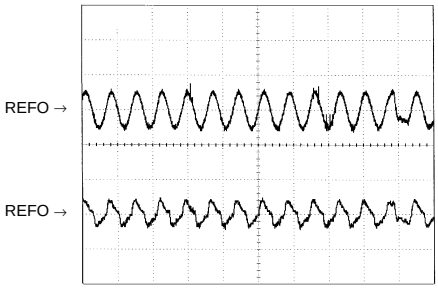	⑧ CH1: TE 0.2V/div. ⑨ CH2: TD 0.5V/div. 1ms/div. Normal mode: During AGC 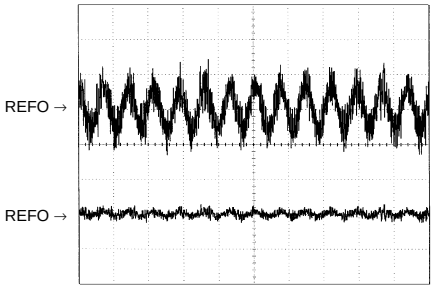
① CH1: RFI 1V/div. ㉑ CH2: HOLD 5V/div. 0.5ms/div. Normal mode: The defect part passes 800µm(B.D) 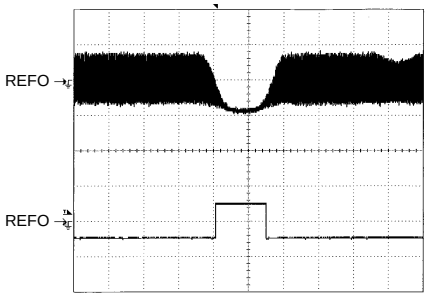	③ CH1: FD 0.5V/div. ㉑ CH2: HOLD 5V/div. 0.5ms/div. Normal mode: The defect part passes 800µm(B.D) 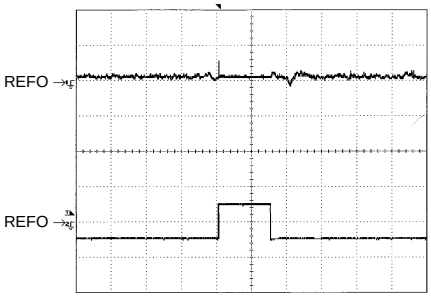	⑨ CH1: TD 0.1V/div. ㉑ CH2: HOLD 5V/div. 0.5ms/div. Normal mode: The defect part passes 800µm(B.D) 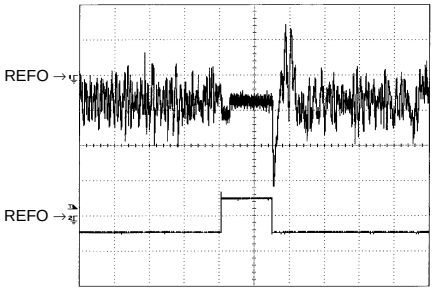

3.6 PANEL PCB UNIT

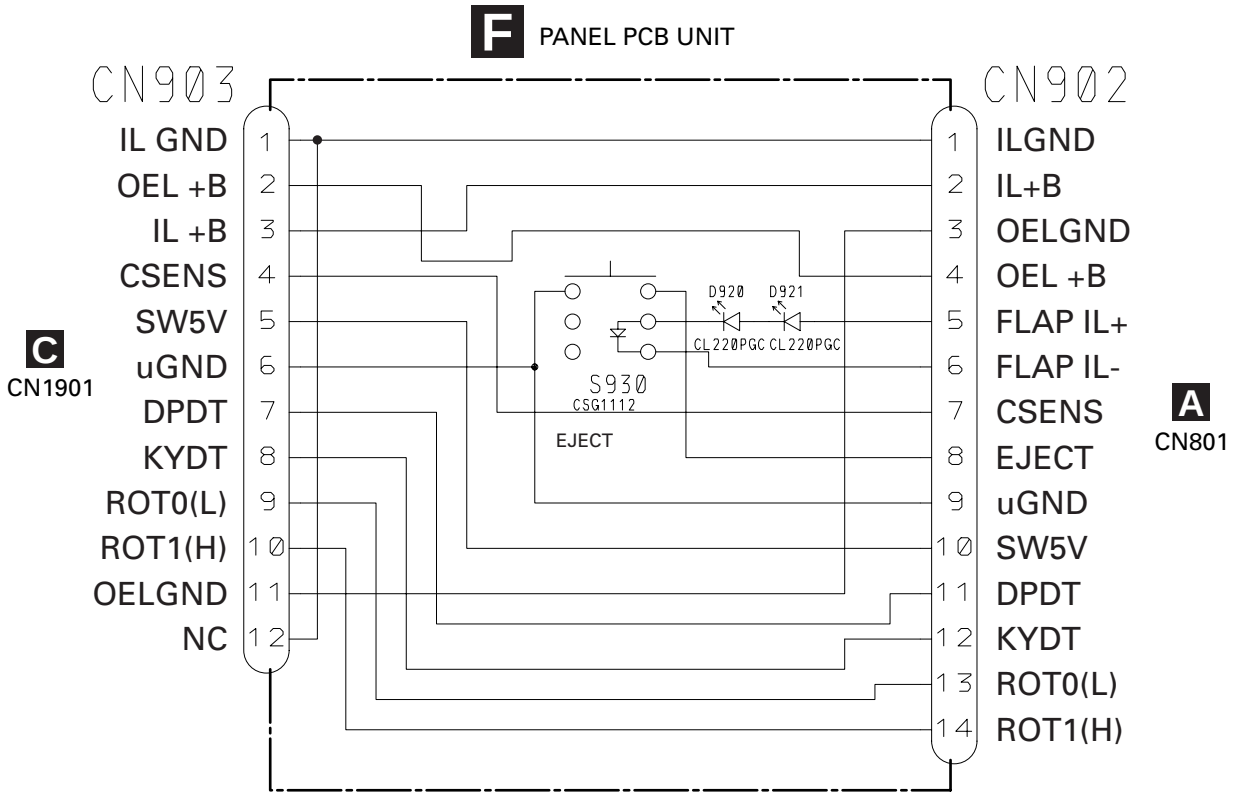

4. PCB CONNECTION DIAGRAM

4.1 TUNER AMP UNIT

NOTE FOR PCB DIAGRAMS

1. The parts mounted on this PCB include all necessary parts for several destination.
   For further information for respective destinations, be sure to check with the schematic diagram.
2. Viewpoint of PCB diagrams

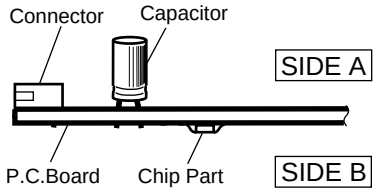

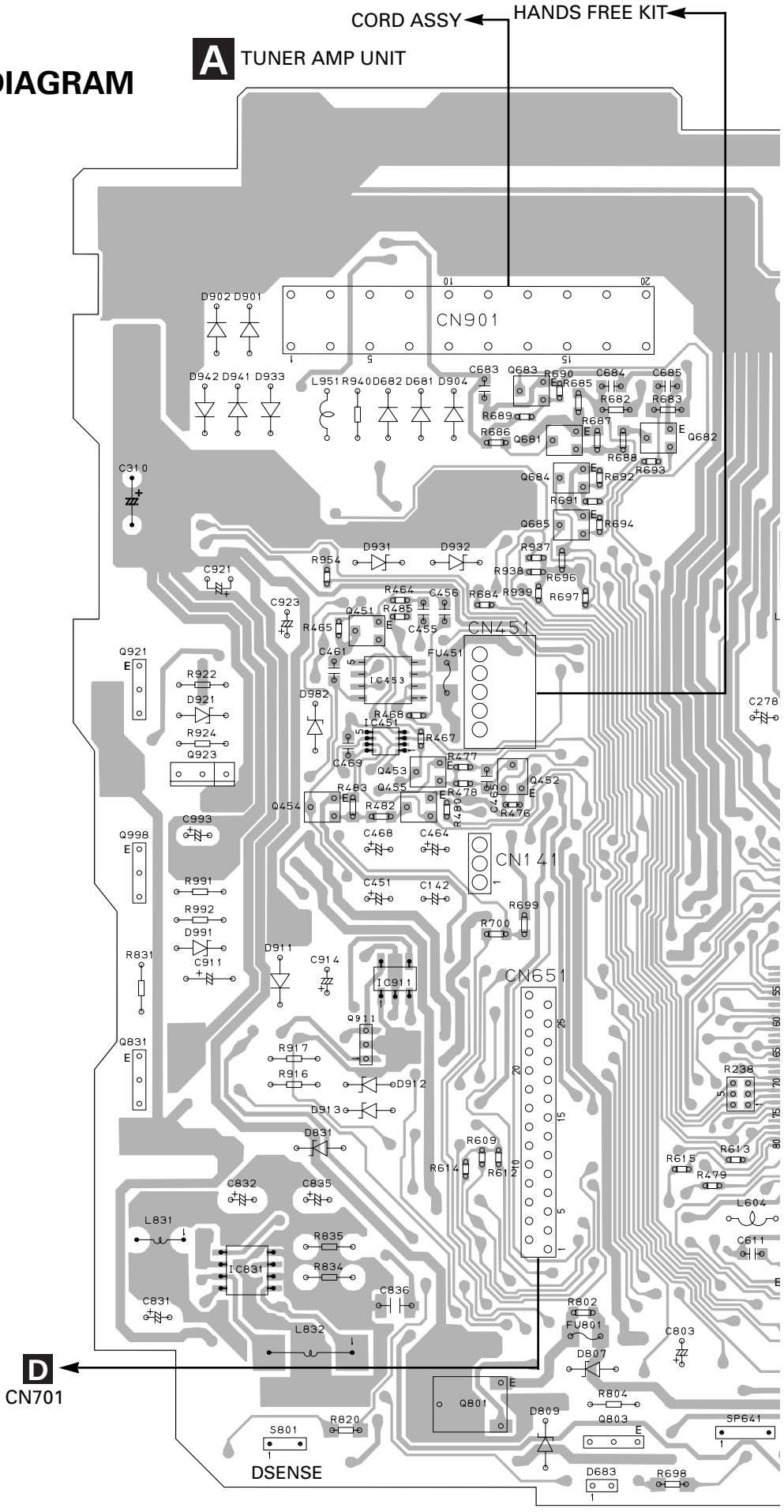

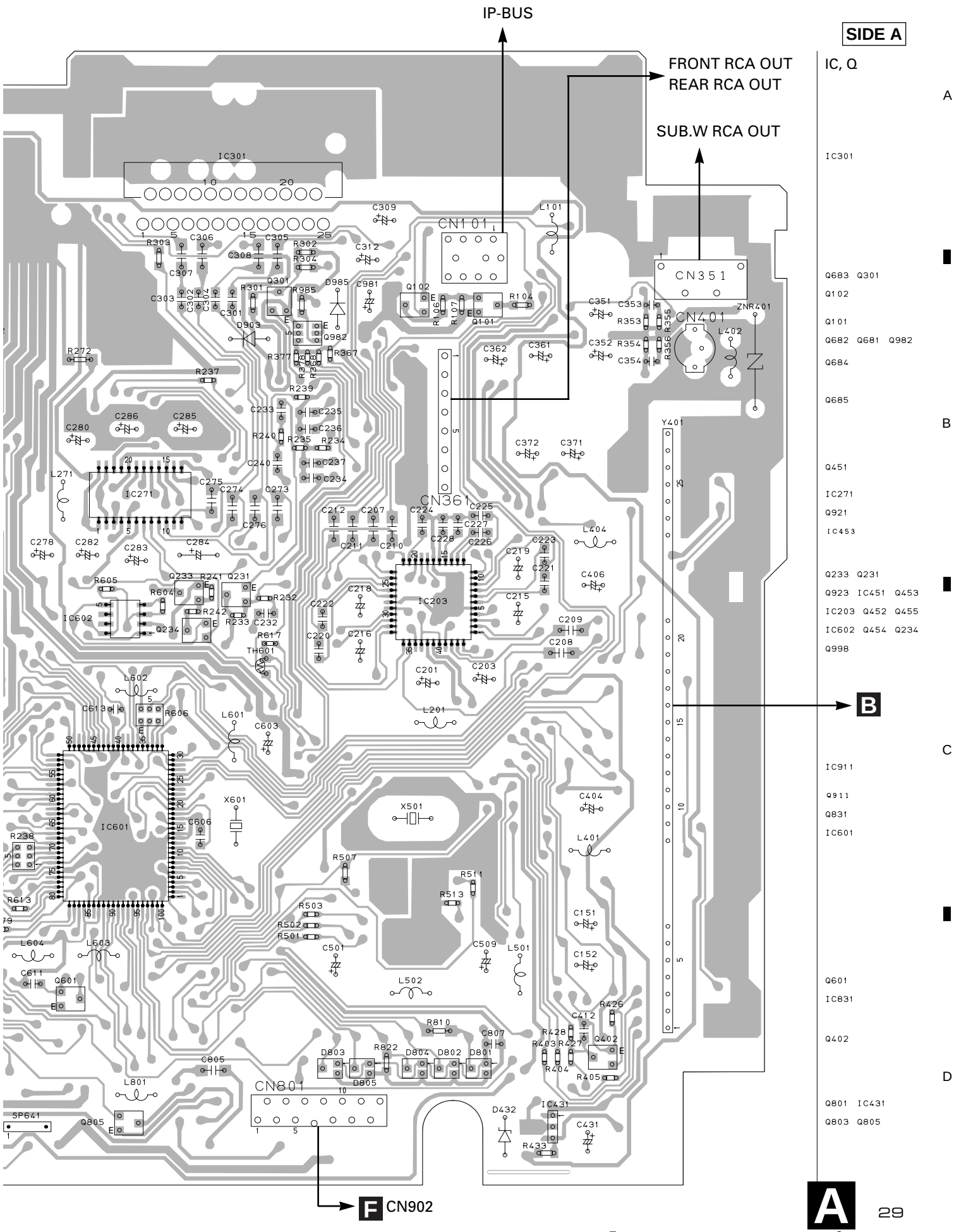
IP-BUS
SIDE A
FRONT RCA OUT
REAR RCA OUT
SUB.W RCA OUT
IC, Q
IC301
Q683 Q301
Q102
Q101
Q682 Q681 Q982
Q684
Q685
Q451
IC271
Q921
IC453
Q233 Q231
Q923 IC451 Q453
IC203 Q452 Q455
IC602 Q454 Q234
Q998
IC911
Q911
Q831
IC601
Q601
IC831
Q402
Q801 IC431
Q803 Q805
CN101
CN351
CN401
CN361
CN801
IC271
IC602
IC203
IC601
IC301
Y401
X501
X601
B
F
CN902
A
29

A TUNER AMP UNT IC, Q

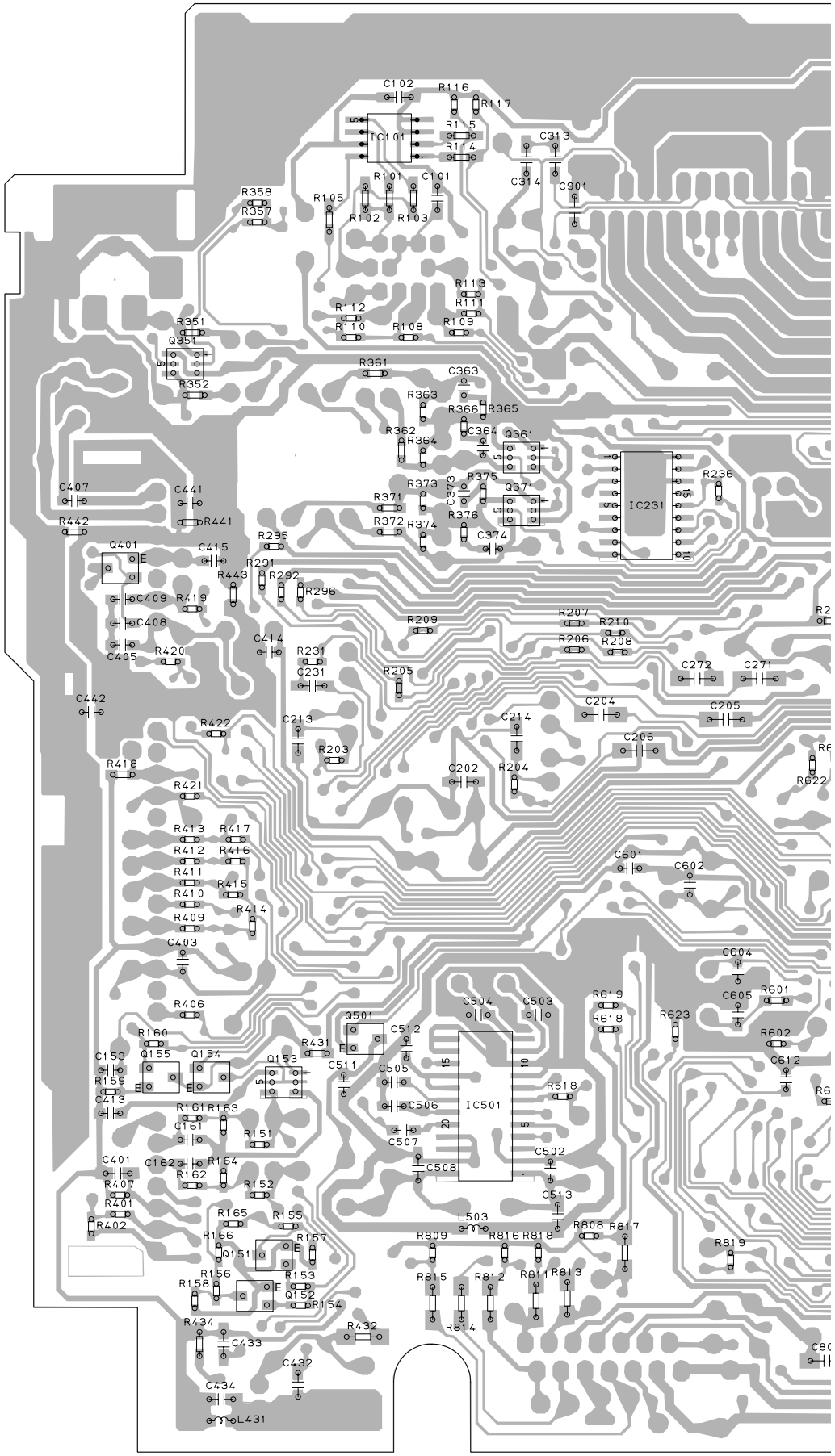

SIDE B

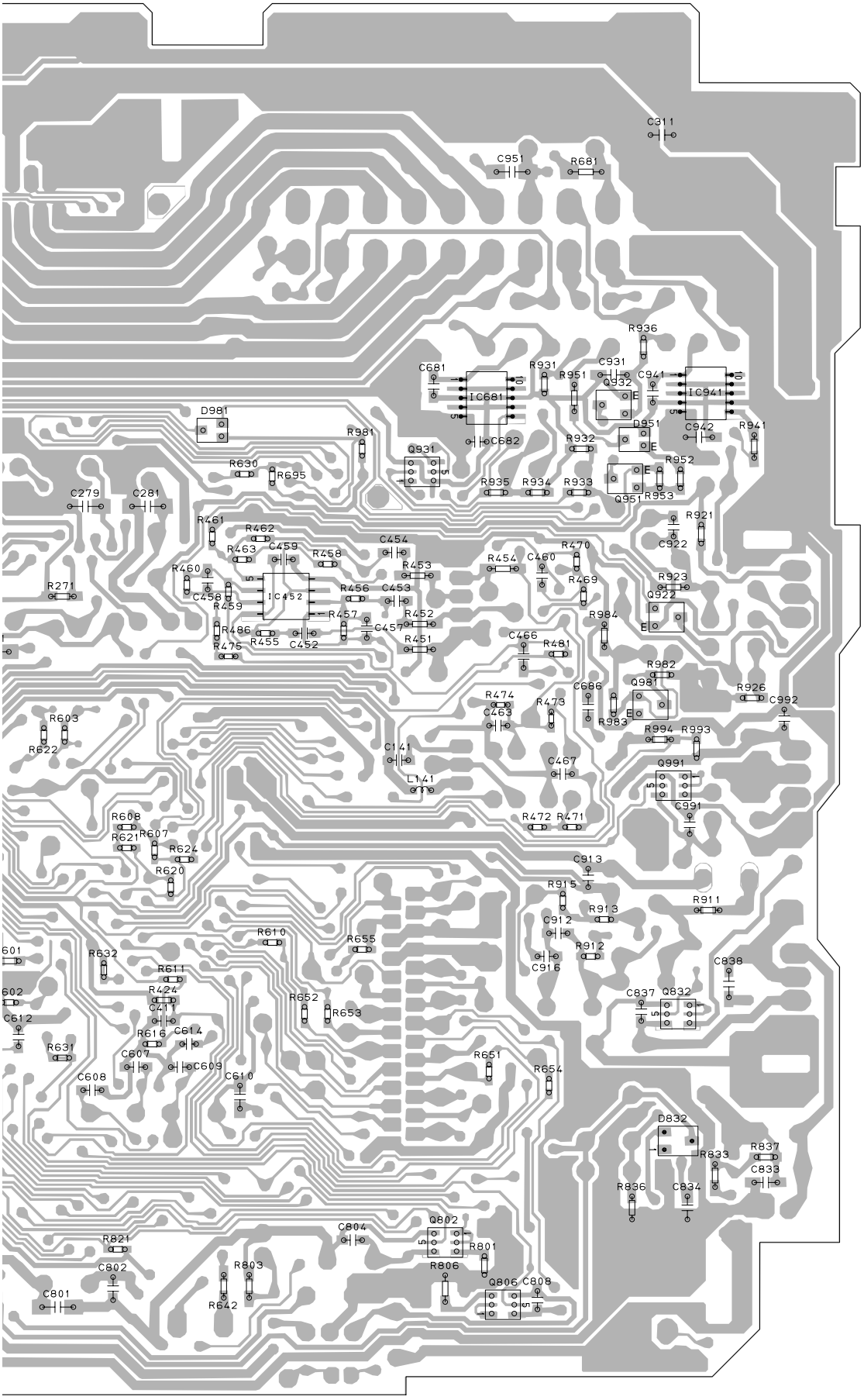
C311
C951
R681
R936
C681
R931
R951
C931
Q932
C941
IC941
IC681
D981
R981
C682
D951
C942
R941
Q931
R932
R630
R695
R952
R935
R934
R933
Q951
R953
C279
C281
R921
R461
R462
C922
R463
C459
R458
C454
R470
R460
R453
R454
C460
R271
C458
R459
IC452
R456
C453
R469
R923
Q922
R457
R452
R984
R486
R455
C452
C457
R451
C466
R481
R475
R982
Q981
C686
R926
R474
R473
C992
C463
R983
R603
R994
R993
R622
C141
C467
Q991
L141
C991
R608
R472
R471
R621
R607
R624
C913
R620
R915
R911
R913
C912
R610
R655
R912
R632
C916
C838
R611
R424
C837
Q832
R652
R653
C411
C612
R616
C614
R631
C607
R651
C609
R654
C608
C610
D832
R837
R833
C833
R836
C834
Q802
C804
R821
R801
C802
R803
R806
Q806
C808
C801
R642

4.2 FM/AM TUNER UNIT

SIDE A

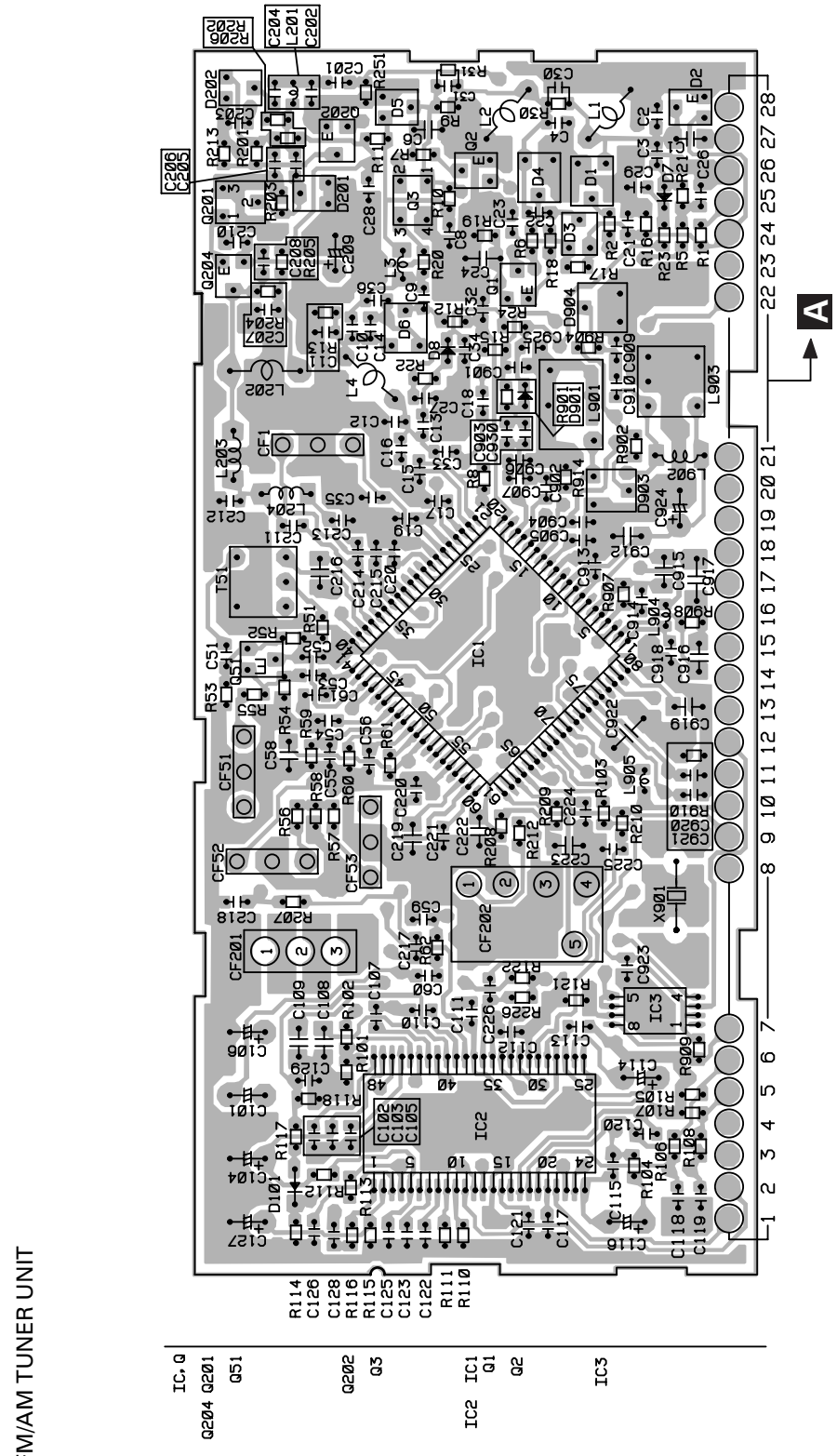

SIDE B

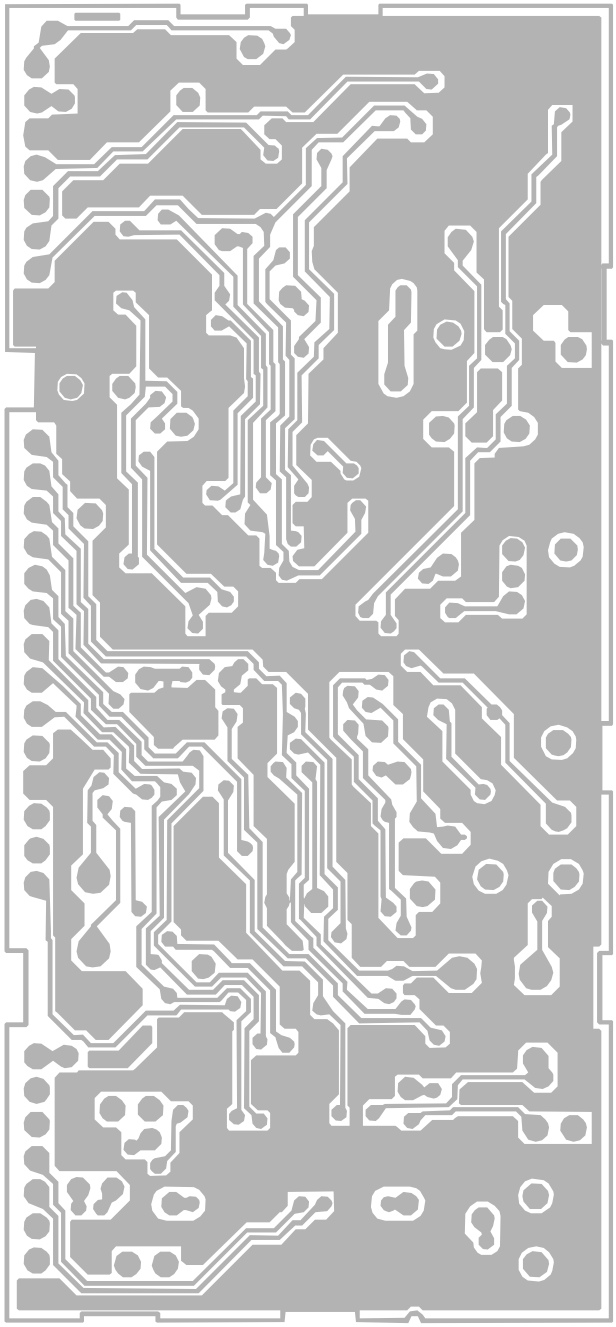

B FM/AM TUNER UNIT

4.3 KEYBOARD UNIT

C KEYBOARD UNIT

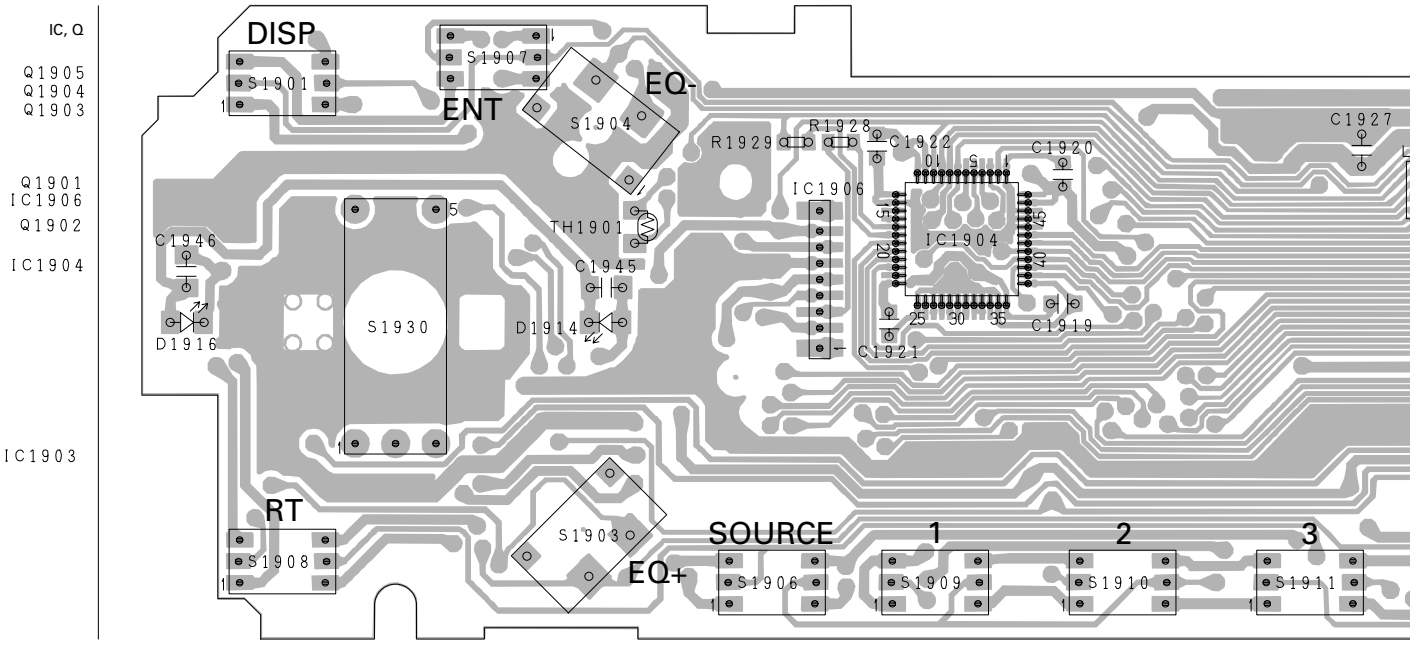

C KEYBOARD UNIT

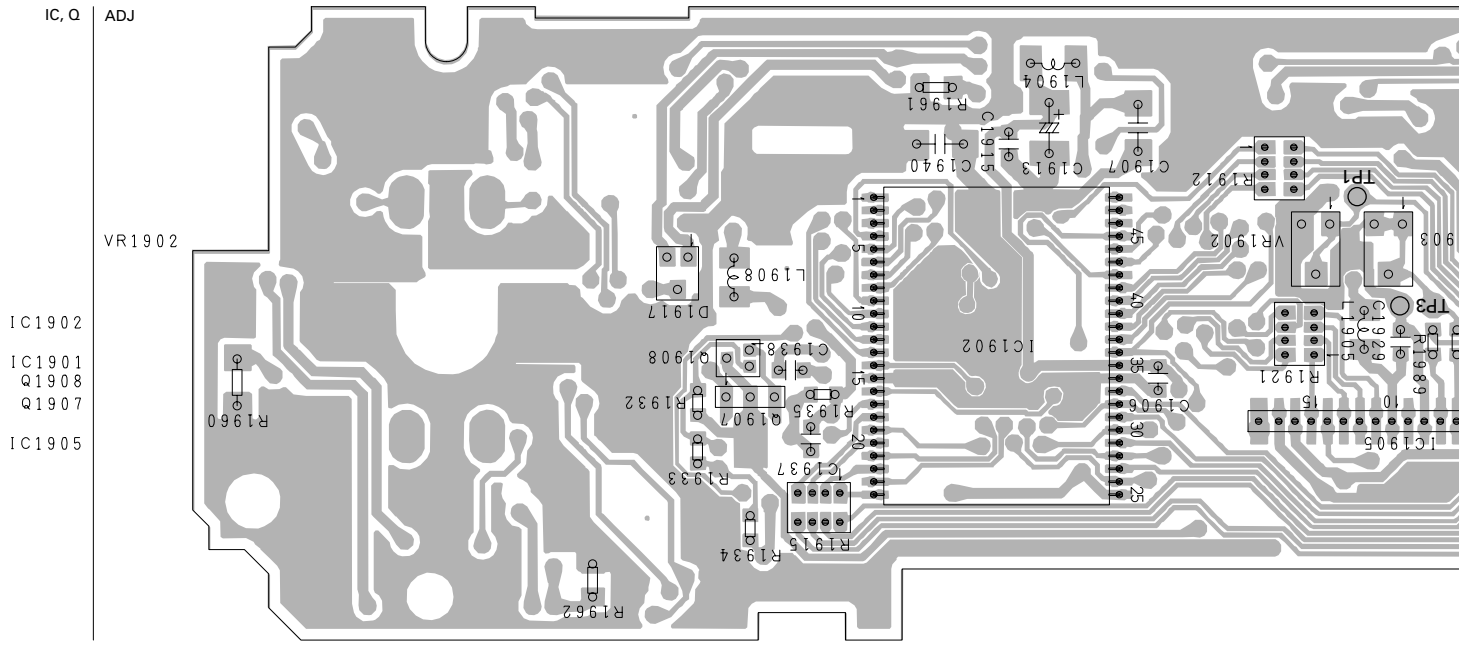

SIDE A

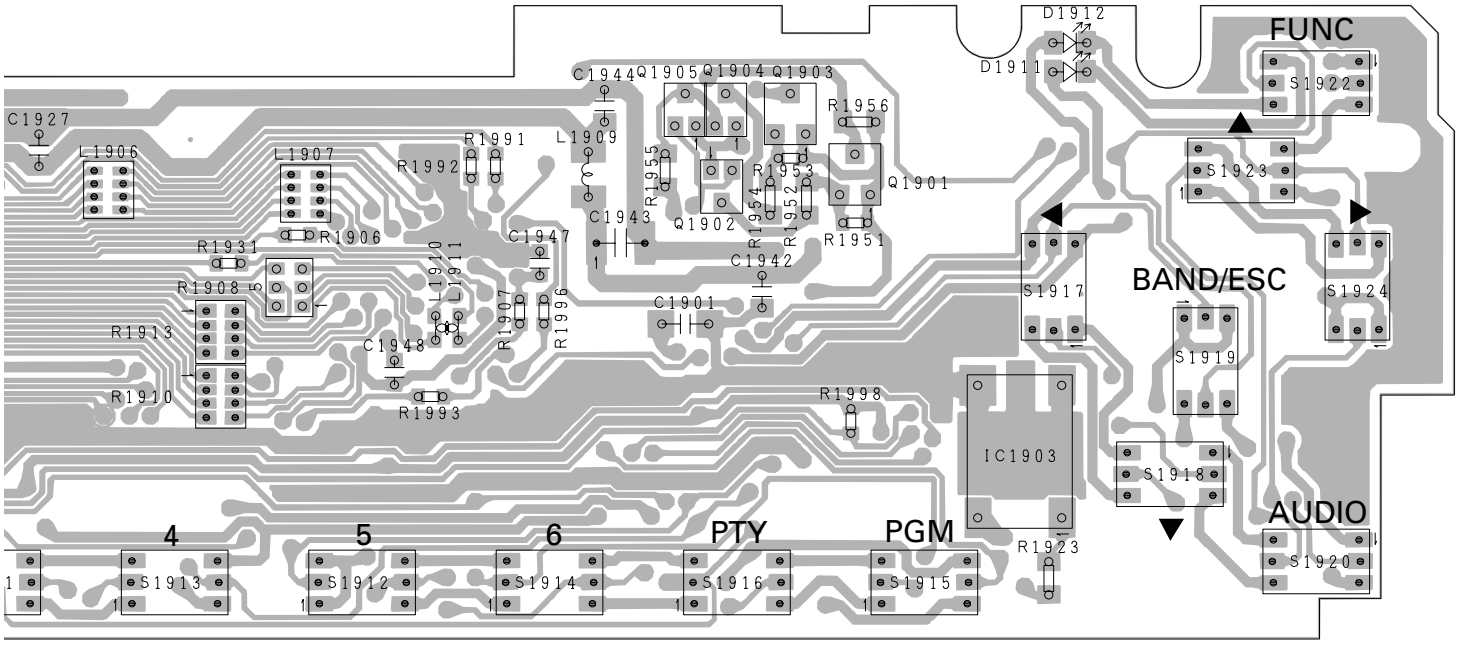

SIDE B

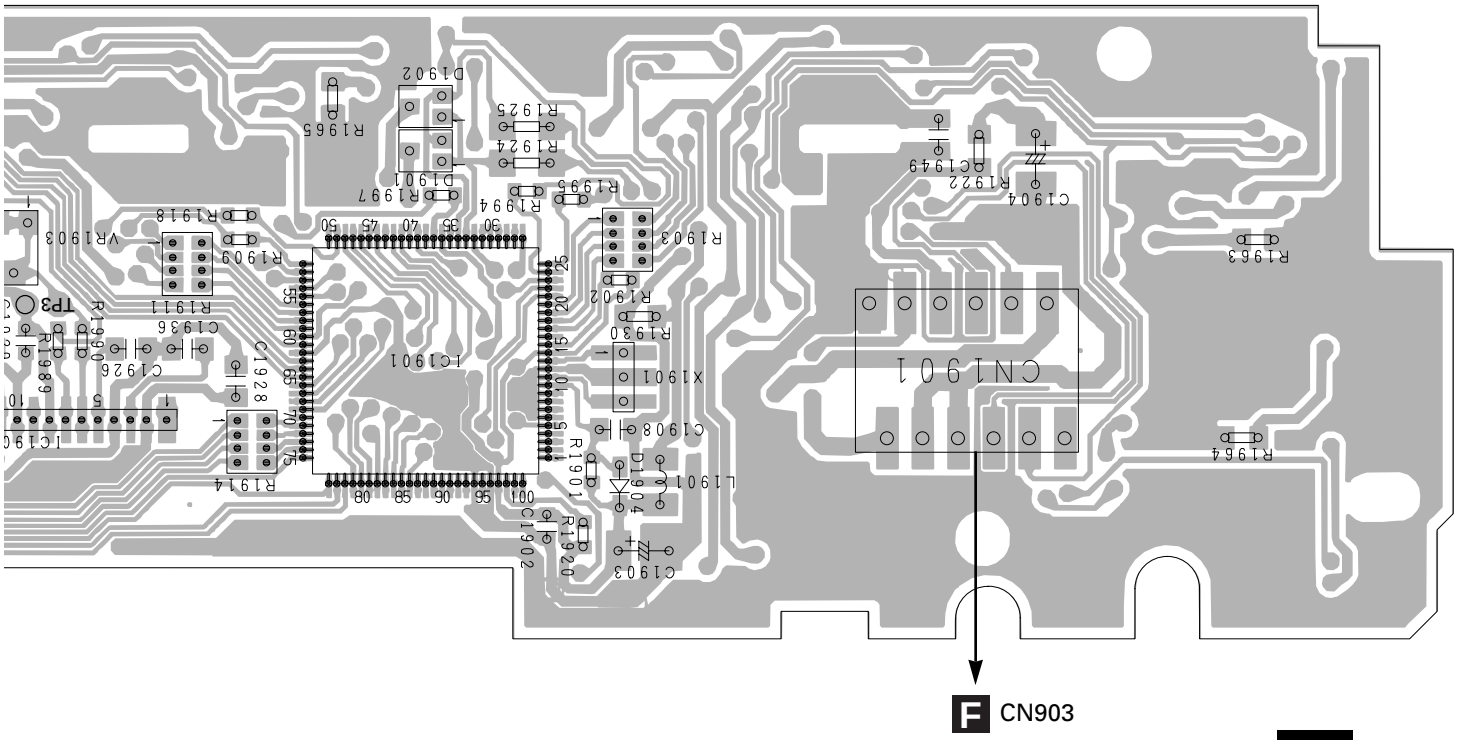

F CN903

4.4 CD MECHANISM MODULE

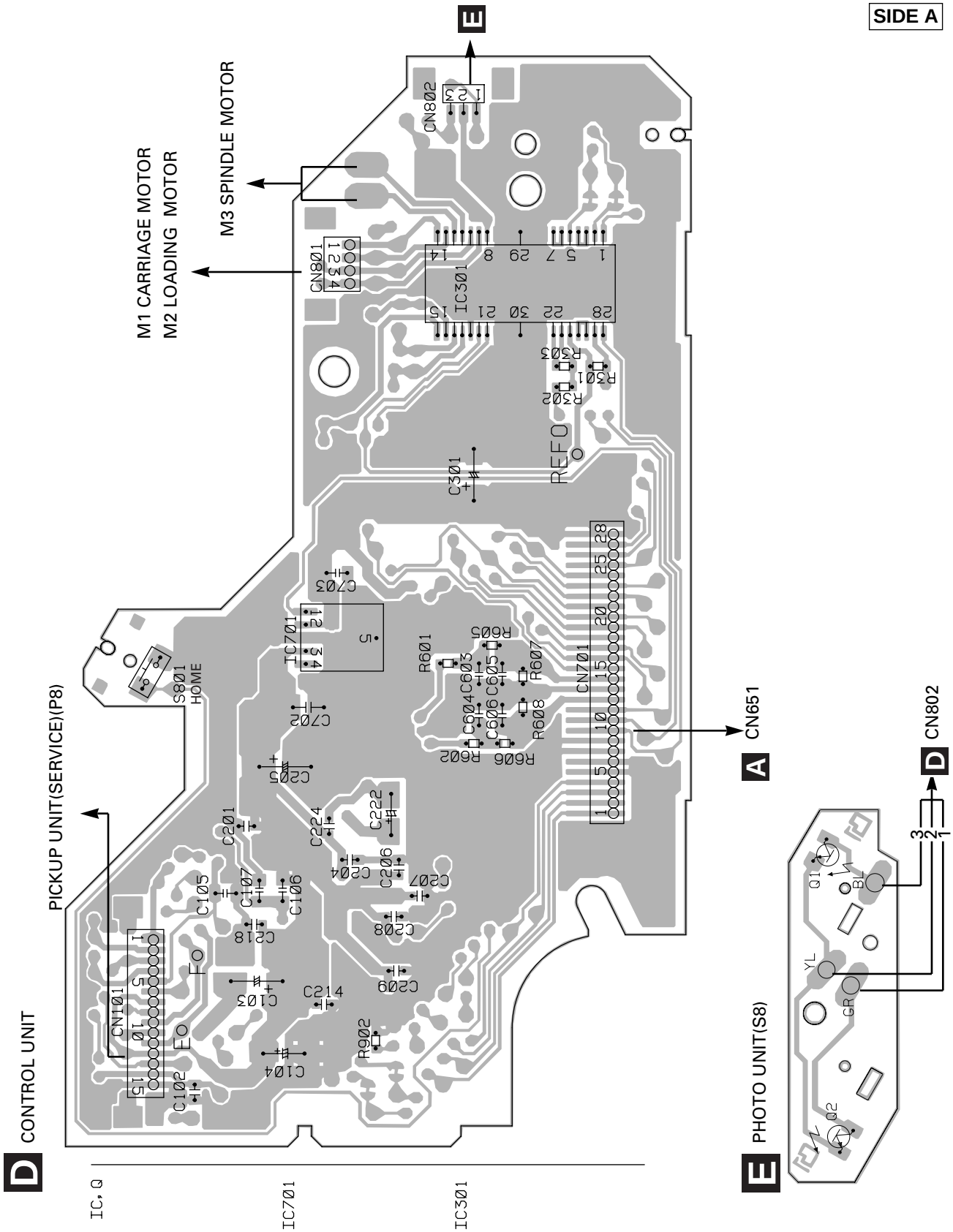

SIDE B

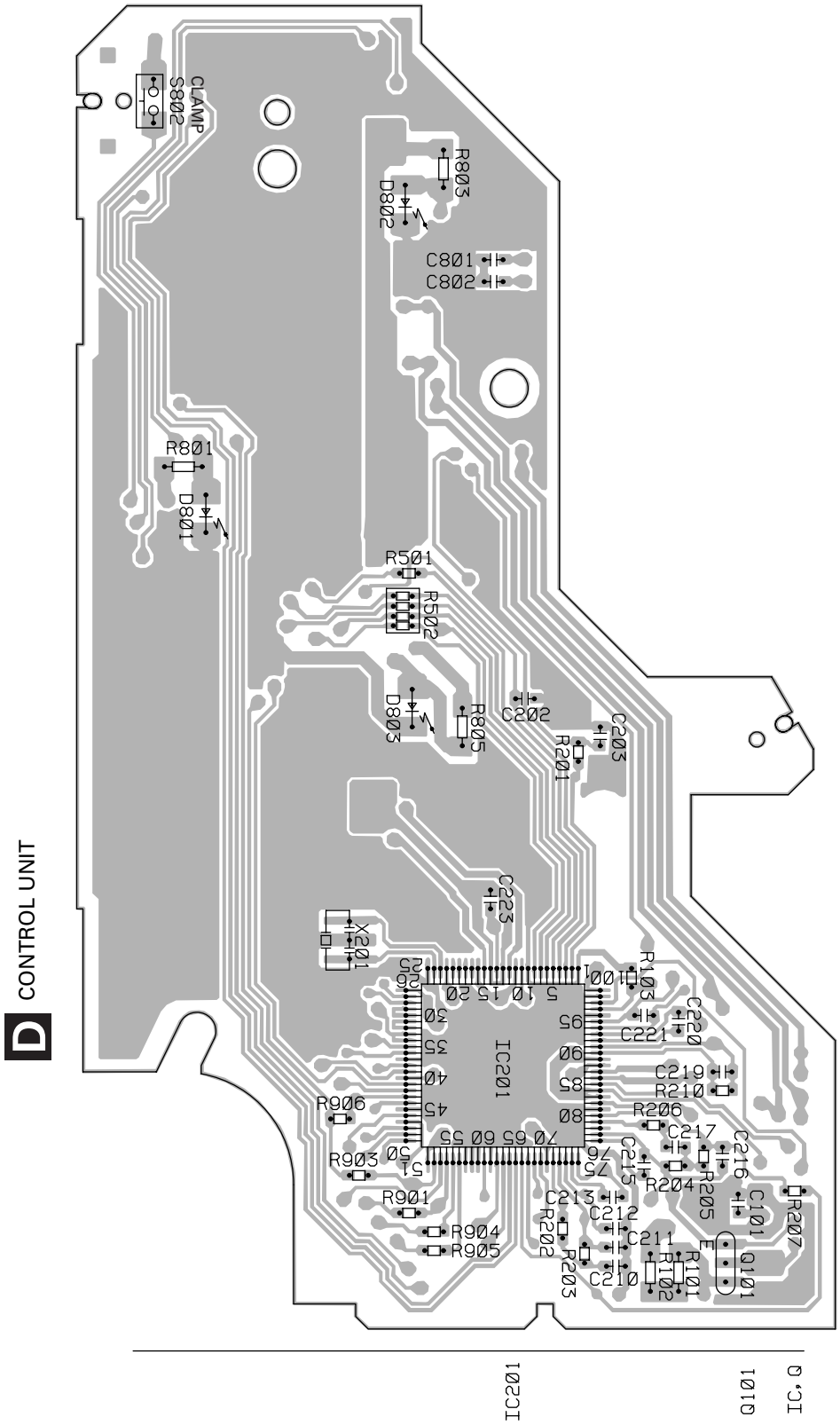

D CONTROL UNIT

4.5 PANEL PCB UNIT

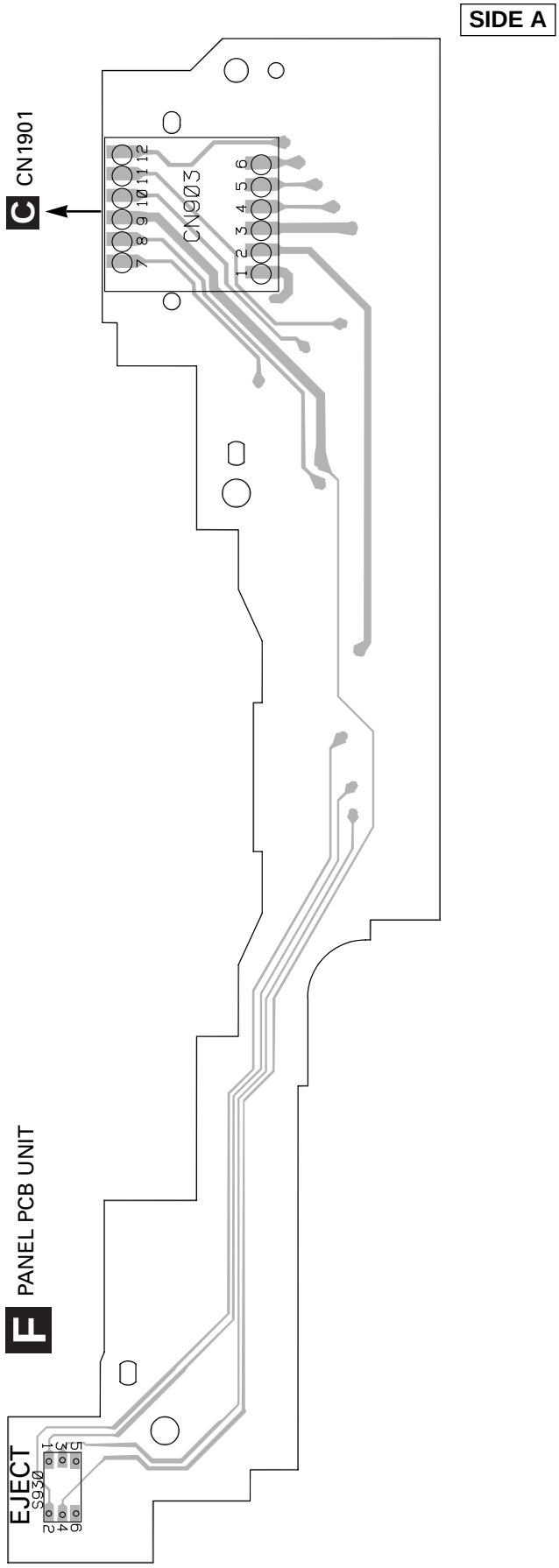

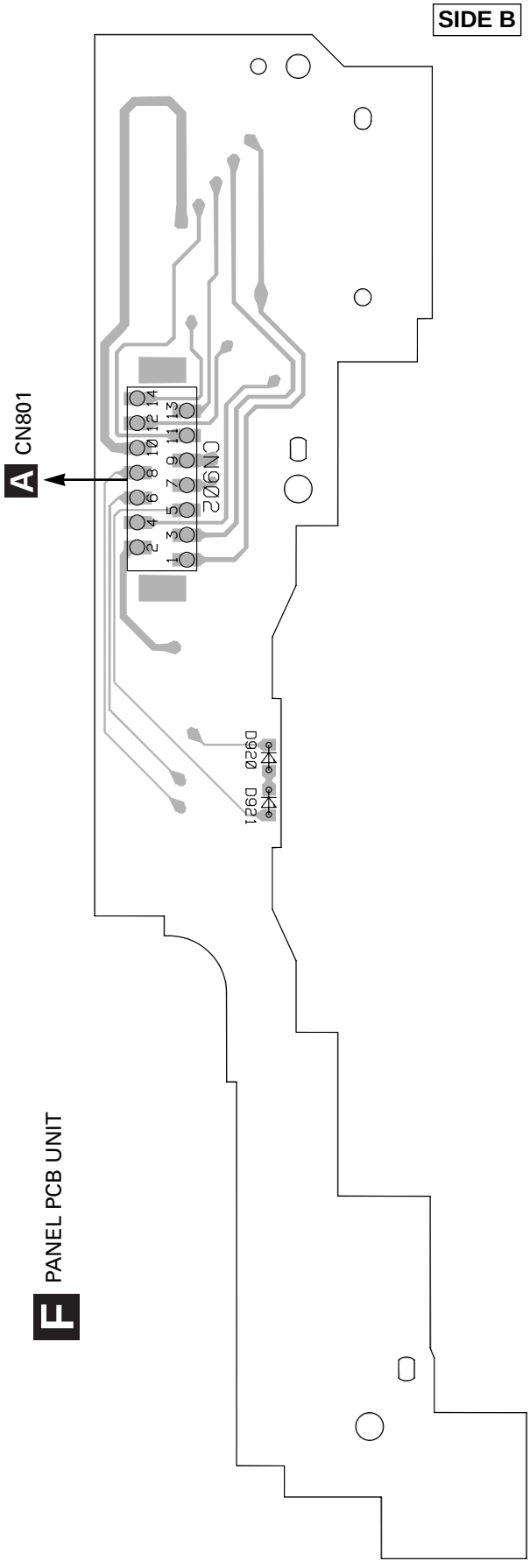

5. ELECTRICAL PARTS LIST

NOTES:

- Parts whose parts numbers are omitted are subject to being not supplied.
- The part numbers shown below indicate chip components.

  Chip Resistor

  RS1/○S○○○J,RS1/○○S○○○J

  Chip Capacitor (except for CQS.....)

  CKS....., CCS....., CSZS.....

B Unit Number : CWE1501
Unit Name : FM/AM Tuner Unit

MISCELLANEOUS

=====Circuit Symbol and No.		===Part Name	Part No.
IC	1	IC	PML002A
IC	2	IC	PM4008A
IC	3	IC	BR9010FV
Q	1	Transistor	2SC4081
Q	2	Transistor	DTC124EU
Q	3	FET	3SK263
Q	51	Transistor	2SC4081
Q	201	FET	2SK932
Q	202	Transistor	DTC124EU
Q	204	Transistor	2SC4081
D	1	Diode	KV1410(23)
D	2	Diode	1SV248
D	6	Diode	KV1410(23)
D	201	Diode	DAN217U
D	202	Diode	DAN217U
D	903	Diode	KV1410(23)
D	904	Diode	SVC253
L	1	Coil	CTC1155
L	3	Inductor	LCTB1R5K2125
L	4	Coil	CTC1155
L	201	Inductor	LCTB330M1608
L	202	Inductor	CTF1287
L	203	Inductor	LCTA121J3225
L	901	Coil	CTC1154
L	902	Inductor	LCTA3R3J3225
L	904	Inductor	LCTBR47M1608
L	905	Inductor	LCTBR47M1608
T	51	Coil	CTE1132
CF	51	Ceramic Filter	CTF1442
CF	52	Ceramic Filter	CTF1442
CF	53	Ceramic Filter	CTF1442
CF	202	Ceramic Filter	CTF1348
X	901	Crystal Resonator 10.250MHz	CSS1432

RESISTORS

R	1		RS1/16S183J
R	2		RS1/16S103J
R	5		RS1/16S0R0J
R	7		RS1/16S273J
R	8		RS1/16S473J
R	9		RS1/16S223J
R	10		RS1/16S473J
R	11		RS1/16S221J
R	12		RS1/16S103J
R	13		RS1/16S104J
R	16		RS1/16S223J
R	17		RS1/16S221J
R	18		RS1/16S221J
R	19		RS1/16S473J
R	20		RS1/16S470J
R	31		RS1/16S0R0J
R	51		RS1/16S470J
R	52		RS1/16S103J
R	53		RS1/16S103J
R	54		RS1/16S331J
R	55		RS1/16S331J
R	56		RS1/16S560J
R	57		RS1/16S560J
R	58		RS1/16S102J
R	59		RS1/16S225J
R	60		RS1/16S133J
R	61		RS1/16S433J
R	101		RS1/16S333J
R	102		RS1/16S103J
R	103		RS1/16S333J
R	104		RS1/16S562J
R	110		RS1/16S154J
R	111		RS1/16S273J
R	113		RS1/16S222J
R	114		RS1/16S333J
R	115		RS1/16S334J
R	116		RS1/16S473J
R	202		RS1/16S472J
R	203		RS1/16S225J
R	204		RS1/16S102J
R	205		RS1/16S220J
R	206		RS1/16S471J
R	208		RS1/16S104J
R	209		RS1/16S104J
R	210		RS1/16S563J
R	213		RS1/16S223J
R	251		RS1/16S225J
R	902		RS1/16S103J
R	904		RS1/16S473J
R	907		RS1/16S103J
R	908		RS1/16S681J
R	909		RS1/16S473J
R	914		RS1/16S562J

CAPACITORS

C	1		CCSQCH4R0C50
C	6		CKSQYB105K10
C	8		CKSRYB222K50
C	10		CCSRCH220J50
C	11		CCSRCH150J50
C	12		CCSRCH8R0D50
C	14		CCSRCJ3R0C50
C	15		CKSRYB103K50
C	16		CKSRYB222K50
C	17		CKSRYB222K50
C	18		CCSRCJ3R0C50
C	19		CKSRYB103K50
C	20		CKSRYB103K50
C	21		CKSRYB103K50
C	24		CKSQYB334K16

=====Circuit Symbol and No.	===Part Name	Part No.
C 26		CKSRYB472K50
C 30		CCSRCH220J50
C 32		CCSRCH470J50
C 35		CKSRYB103K50
C 51		CKSRYB103K50
C 52		CKSRYB473K16
C 53		CCSRCK2R0C50
C 54		CKSRYB103K50
C 55		CKSRYB104K16
C 56		CKSRYB104K16
C 58		CKSQYB224K16
C 101		CEALNP100M10
C 102		CCSRCH151J50
C 103		CKSRYB473K16
C 105		CKSRYB682K25
C 106		CEALR68M50
C 107		CKSRYB103K50
C 108		CKSQYB474K16
C 109		CKSQYB474K16
C 110		CKSRYB104K16
C 111		CKSRYB104K16
C 112		CKSRYB104K16
C 113		CKSRYB123K25
C 114		CEAL220M6R3
C 115		CKSRYB473K16
C 116		CEAL2R2M50
C 117		CKSRYB102K50
C 120		CKSRYB183K25
C 121		CKSRYB332K50
C 122		CKSRYB562K25
C 123		CKSRYB681K50
C 125		CKSRYB103K50
C 126		CKSRYB103K50
C 127		CEAL2R2M50
C 128		CKSRYB103K50
C 201		CCSRCH471J50
C 202		CCSRCH100D50
C 203		CKSRYB104K16
C 204		CKSRYB332K50
C 205		CKSRYB103K50
C 206		CKSRYB104K16
C 207		CKSRYB473K16
C 208		CCSRCH560J50
C 209		CEAL470M6R3
C 210		CKSRYB103K50
C 211		CKSRYB103K50
C 212		CCSRCH101J50
C 215		CKSRYB223K25
C 216		CKSQYB334K16
C 217		CKSRYB103K50
C 219		CKSQYB105K10
C 220		CKSRYB104K16
C 221		CKSRYB473K16
C 222		CKSQYB334K16
C 223		CKSQYB474K16
C 224		CKSRYB104K16
C 225		CKSRYB272K50
C 226		CKSRYB682K25
C 902		CCSRCH270J50
C 904		CKSRYB223K25
C 905		CKSRYB103K50
C 906		CCSRTH100D50
C 907		CCSRTH150J50
C 909		CCSRTH100D50
C 910		CKSRYB332K50

=====Circuit Symbol and No.	===Part Name	Part No.
C 912		CKSQYB474K16
C 913		CKSRYB223K25
C 914		CKSRYB682K25
C 915		CKSQYB223K25
C 916		CKSQYB474K16
C 917		CKSYB475K10
C 918		CKSRYB223K25
C 919		CKSQYB225K10
C 920		CCSRCH270J50
C 921		CCSRCH270J50
C 922		CKSYB105K16
C 923		CKSRYB103K50

A

Unit Number : CWM6931
(DEH-P8200R/X1N/UC)
: CWM6933
(DEH-P8250/X1N/ES)

Unit Name : Tuner Amp Unit

MISCELLANEOUS

IC	101	IC	HA12187FP
IC	203	IC	PML004AF
IC	231	IC	BA3834F
IC	271	IC	PA2028A
IC	301	IC	PAL005A
IC	431	IC	S-81250SGUP
IC	451	IC	TC4W66FU
IC	452	IC	NJM2068MD
IC	453	IC	NJM2068MD
IC	501	IC (DEH-P8200R)	PM4009A
IC	601	IC (DEH-P8200R)	PE5097A
IC	601	IC (DEH-P8250)	PE5099A
IC	831	IC	NJM2360M
IC	911	IC	S-875037BUPABE
IC	941	IC	TPD1018F
Q	101	Transistor	2SA1037K
Q	102	Transistor	DTC124EK
Q	231	Transistor	2SC2412K
Q	233	Transistor	2SA1037K
Q	234	Transistor	DTC144EK
Q	301	Transistor	DTC124EK
Q	351	Transistor	HN1C03F
Q	361	Transistor	HN1C03F
Q	371	Transistor	HN1C03F
Q	401	Transistor	2SC2412K
Q	451	Transistor	2SD1757K
Q	452	Transistor	2SC2412K
Q	453	Transistor	2SA1037K
Q	454	Transistor	2SA1037K
Q	455	Transistor	DTC114EK
Q	501	Transistor (DEH-P8200R)	DTA124EK
Q	601	Transistor	DTA114EK
Q	681	Transistor	2SA1037K
Q	682	Transistor	DTC124EK
Q	683	Transistor	2SC2412K
Q	801	Transistor	2SD1760F5
Q	802	Transistor	IMD2A
Q	803	Transistor	2SD1859
Q	805	Transistor	DTC143EK
Q	806	Transistor	IMD2A
Q	831	Transistor	2SD2396
Q	832	Transistor	IMD2A
Q	911	Transistor	2SB1189
Q	921	Transistor	2SD2396
Q	922	Transistor	DTC114EK
Q	923	Transistor	2SB1238

Circuit Symbol and No.		Part Name	Part No.
Q	931	Transistor	IMX1
Q	932	Transistor	DTC114EK
Q	951	Transistor	2SA1037K
Q	981	Transistor	2SC2412K
Q	982	Transistor	IMD2A
Q	991	Transistor	IMD2A
Q	998	Transistor	2SD2396
D	432	Diode	HZS16L(1)
D	683	LED	BR4361F
D	801	Diode Network	DA204U
D	802	Diode Network	DA204U
D	803	Diode Network	DA204U
D	804	Diode Network	DA204U
D	805	Diode Network	DA204U
D	807	Diode	HZS6L(B1)
D	809	Diode	HZS11L(A1)
D	831	Diode	HZS11L(A1)
D	832	Diode	SB05-03C
D	901	Diode	ERA15-02VH
D	902	Diode	ERA15-02VH
D	903	Diode	ERA15-02VH
D	904	Diode	ERA15-02VH
D	911	Diode	ERA15-02VH
D	912	Diode	RD20JS(B2)
D	913	Diode	RD20JS(B2)
D	921	Diode	HZS9L(C1)
D	931	Diode	HZS7L(A1)
D	932	Diode	HZS7L(C3)
D	933	Diode	ERA15-02VH
D	941	Diode	ERA15-02VH
D	942	Diode	ERA15-02VH
D	951	Diode	DAN202U
D	981	Diode	DAN202U
D	982	Diode	HZS9L(A2)
D	985	Diode	1SS270
D	991	Diode	HZS9L(B1)
ZNR	401	Surge-Protector	DSP-201M-A21F
L	101	Inductor	LAU3R3K
L	201	Ferri-Inductor	LAU2R2K
L	271	Ferri-Inductor	LAU101K
L	401	Ferri-Inductor	LAU2R2K
L	402	Ferri-Inductor	LAU4R7K
L	404	Ferri-Inductor	LAU1R0M
L	431	Inductor	CTF1420
L	501	Inductor (DEH-P8200R)	LAU100K
L	502	Ferri-Inductor (DEH-P8200R)	LAU101K
L	503	Inductor (DEH-P8200R)	CTF1420
L	601	Inductor	LAU100K
L	602	Ferri-Inductor	LAU2R2K
L	603	Ferri-Inductor	LAU2R2K
L	604	Ferri-Inductor	LAU2R2K
L	801	Inductor	LAU100K
L	831	Inductor	CTF1489
L	832	Inductor	CTF1510
L	951	Ferri-Inductor	LAU2R2K
TH	601	Thermistor	CCX1037
X	501	Radiator 3.648MHz (DEH-P8200R)	CSS1500
X	601	Radiator 12.5829MHz	CSS1495
S	801	Switch(DSENSE)	CSN1039
FU	451	Micro-Fuse 200mA	CEK1189
		FM/AM Tuner Unit	CWE1501
SP	641	Buzzer	CPV1050

RESISTORS

Circuit Symbol and No.		Part Name	Part No.
R	101		RS1/10S101J
R	102		RS1/10S620J
R	103		RS1/10S101J
R	104		RS1/10S222J
R	105		RS1/10S103J
R	106		RS1/10S562J
R	107		RS1/10S332J
R	108		RS1/16S102J
R	109		RS1/16S102J
R	110		RS1/16S223J
R	111		RS1/16S223J
R	112		RS1/16S181J
R	113		RS1/16S181J
R	114		RS1/10S102J
R	115		RS1/10S102J
R	116		RS1/16S473J
R	117		RS1/16S473J
R	151		RS1/16S0R0J
R	152		RS1/16S0R0J
R	161		RS1/16S272J
R	162		RS1/16S272J
R	163		RS1/16S162J
R	164		RS1/16S162J
R	203		RS1/16S102J
R	204		RS1/16S102J
R	231		RS1/16S224J
R	232		RS1/16S224J
R	233		RS1/16S104J
R	234		RS1/16S104J
R	235		RS1/16S102J
R	236		RS1/16S473J
R	237		RS1/16S102J
R	238		RA3C102J
R	239		RS1/16S103J
R	240		RS1/16S103J
R	241		RS1/16S223J
R	242		RS1/16S103J
R	271		RS1/10S203J
R	272		RS1/8S0R0J
R	301		RS1/10S103J
R	302		RS1/10S103J
R	303		RS1/10S103J
R	304		RS1/10S331J
R	351		RS1/10S820J
R	352		RS1/10S820J
R	353		RS1/16S223J
R	354		RS1/16S223J
R	355		RS1/16S471J
R	356		RS1/16S471J
R	357		RS1/16S103J
R	358		RS1/16S103J
R	361		RS1/10S820J
R	362		RS1/10S820J
R	363		RS1/16S223J
R	364		RS1/16S223J
R	365		RS1/16S471J
R	366		RS1/16S471J
R	367		RS1/16S103J
R	368		RS1/16S103J
R	371		RS1/10S820J
R	372		RS1/10S820J
R	373		RS1/16S223J
R	374		RS1/16S223J
R	375		RS1/16S471J
R	376		RS1/16S471J

Circuit Symbol and No.			Part Name	Part No.
R	377			RS1/16S103J
R	378			RS1/16S103J
R	401			RS1/16S473J
R	402			RS1/16S473J
R	403			RS1/16S681J
R	404			RS1/16S681J
R	409			RS1/16S681J
R	410			RS1/16S103J
R	411			RS1/16S681J
R	412			RS1/16S681J
R	413			RS1/16S681J
R	414			RS1/16S473J
R	415			RS1/16S472J
R	416			RS1/16S473J
R	417			RS1/16S473J
R	418			RS1/10S473J
R	419			RS1/16S222J
R	420			RS1/16S222J
R	424			RS1/10S393J
R	432			RS1/8S151J
R	433			RS1/10S0R0J
R	442			RS1/10S0R0J
R	443			RS1/10S0R0J
R	452			RS1/8S102J
R	453			RS1/8S511J
R	454			RS1/8S152J
R	456			RS1/16S103J
R	457			RS1/16S103J
R	458			RS1/16S0R0J
R	459			RS1/16S103J
R	460			RS1/16S474J
R	463			RS1/16S0R0J
R	464			RS1/16S103J
R	465			RS1/16S105J
R	467			RS1/16S103J
R	468			RS1/16S104J
R	469			RS1/16S103J
R	470			RS1/16S473J
R	471			RS1/16S102J
R	472			RS1/16S102J
R	473			RN1/16SE1302D
R	474			RN1/16SE1002D
R	475			RN1/16SE5601D
R	476			RN1/16SE1001D
R	477			RS1/16S104J
R	478			RS1/16S104J
R	482			RS1/10S152J
R	483			RS1/10S223J
R	485			RS1/16S223J
R	486			RS1/16S271J
R	501			RS1/16S102J
R	502	(DEH-P8200R)		RS1/16S102J
R	503	(DEH-P8200R)		RS1/16S102J
R	511	(DEH-P8200R)		RS1/16S102J
R	513	(DEH-P8200R)		RS1/16S225J
R	518	(DEH-P8200R)		RS1/16S681J
R	601			RS1/10S102J
R	602			RS1/16S473J
R	606			RA3C102J
R	609			RS1/16S473J
R	610			RS1/16S222J
R	611	(DEH-P8250)		RS1/16S473J
R	612			RS1/16S473J
R	613			RS1/16S222J
R	614			RS1/16S473J

Circuit Symbol and No.			Part Name	Part No.
R	615			RS1/16S222J
R	617			RN1/16SE1502D
R	618			RS1/16S473J
R	619			RS1/16S473J
R	623			RS1/16S473J
R	624			RS1/16S473J
R	630			RS1/16S102J
R	642			RS1/10S102J
R	651			RS1/16S681J
R	652			RS1/16S102J
R	653			RS1/16S102J
R	654			RS1/16S681J
R	655			RS1/16S681J
R	681			RS1/8S102J
R	686			RS1/10S103J
R	687			RS1/10S223J
R	688			RS1/10S223J
R	689			RS1/16S223J
R	690			RS1/16S272J
R	695			RS1/16S473J
R	698			RS1/8S471J
R	699			RS1/10S102J
R	700			RS1/10S103J
R	801			RS1/10S302J
R	802			RS1/10S1R0J
R	803			RS1/10S473J
R	804			RD1/4PU471J
R	806			RS1/8S102J
R	808			RS1/16S473J
R	809			RS1/16S473J
R	810			RS1/8S222J
R	811			RS1/8S222J
R	812			RS1/8S222J
R	813			RS1/8S222J
R	814			RS1/8S222J
R	815			RS1/8S222J
R	817			RS1/8S222J
R	818			RS1/16S473J
R	819			RS1/16S473J
R	820			RS1/8S102J
R	822			RS1/10S104J
R	831			RD1/4PU681J
R	833			RS1/10S361J
R	834			RD1/4PU302J
R	835			RD1/4PU302J
R	836			RS1/10S121J
R	837			RS1/10S0R0J
R	911			RS1/10S0R0J
R	912			RS1/16S511J
R	913			RS1/16S104J
R	915			RS1/16S102J
R	916			RD1/4PU680J
R	917			RD1/4PU680J
R	921			RS1/10S1R0J
R	922			RD1/4PU221J
R	923			RS1/8S751J
R	924			RD1/4PU152J
R	926			RS1/10S223J
R	931			RS1/10S472J
R	932			RS1/10S473J
R	933			RS1/10S103J
R	934			RS1/10S473J
R	935			RS1/10S103J
R	936			RS1/10S103J
R	937			RS1/16S473J
R	938			RS1/16S473J

=====Circuit Symbol and No.		===Part Name	Part No.
R	939		RS1/16S473J
R	940		RD1/4PU102J
R	941		RS1/10S103J
R	951		RS1/8S153J
R	952		RS1/10S472J
R	953		RS1/10S472J
R	954		RS1/16S102J
R	981		RS1/16S223J
R	982		RS1/10S473J
R	983		RS1/10S103J
R	984		RS1/10S473J
R	985		RS1/10S102J
R	991		RD1/4PU221J
R	992		RD1/4PU221J
R	993		RS1/10S472J
R	994		RS1/10S222J

CAPACITORS

C	101		CKSQYB104K16
C	102		CKSQYB104K16
C	161		CKSQYB183K25
C	162		CKSQYB183K25
C	201		CEJA470M16
C	202		CKSQYB104K16
C	203		CEJA100M16
C	204		CKSYB105K16
C	205		CKSYB105K16
C	206		CKSYB105K16
C	207		CKSYB105K16
C	208		CKSYB224K16
C	209		CKSYB224K16
C	210		CKSYB105K16
C	211		CKSYB105K16
C	212		CKSYB105K16
C	213		CKSQYB152K50
C	214		CKSQYB152K50
C	215		CEJANP4R7M16
C	216		CEJANP4R7M16
C	218		CEJANP4R7M16
C	219		CEJANP4R7M16
C	220		CKSQYB473K25
C	221		CKSQYB473K25
C	222		CKSQYB473K25
C	223		CKSQYB473K25
C	224		CKSQYB153K50
C	225		CKSQYB153K50
C	226		CKSQYB473K25
C	227		CKSQYB123K50
C	228		CKSQYB333K50
C	231		CKSQYB104K16
C	232		CKSQYB104K16
C	233		CKSQYB224K16
C	234		CKSQYB105K16
C	235		CKSQYB104K16
C	236		CKSQYB104K16
C	237		CKSQYB103K50
C	240		CKSQYB104K16
C	271		CKSYB105K16
C	272		CKSYB105K16
C	273		CKSYB105K16
C	274		CKSYB105K16
C	275		CKSYB105K16
C	276		CKSYB105K16
C	278		CEJA100M16
C	279		CKSYB684K16
C	280		CEJA100M16
C	281		CKSYB225K16
C	282		CEJA4R7M35

=====Circuit Symbol and No.		===Part Name	Part No.
C	283		CEJA101M16
C	284		CASAQ3R3M16
C	285		CEJA330M25
C	286		CEJA330M25
C	301		CKSQYB474K16
C	302		CKSQYB474K16
C	303		CKSQYB474K16
C	304		CKSQYB474K16
C	305		CKSYB474K16
C	306		CKSYB474K16
C	307		CKSYB474K16
C	308		CKSYB474K16
C	309		CEHAR330M10
C	310	3300µF/16V	CCH1330
C	311		CKSQYB104K16
C	312		CEJA100M16
C	313		CKSYB225K16
C	314		CKSYB225K16
C	351		CEJA100M16
C	352		CEJA100M16
C	353		CKSRYB222K50
C	354		CKSRYB222K50
C	361		CEJA100M16
C	362		CEJA100M16
C	363		CKSRYB222K50
C	364		CKSRYB222K50
C	371		CEJA100M16
C	372		CEJA100M16
C	373		CKSRYB222K50
C	374		CKSRYB222K50
C	403		CKSQYB473K25
C	404		CEJA101M10
C	405		CKSQYB103K50
C	406		CEJA220M10
C	407		CKSQYB103K50
C	408		CKSQYB223K50
C	409		CKSQYB223K50
C	411		CKSQYB472K50
C	431		CEJA101M16
C	433		CCSQCH101J50
C	451		CEJA100M16
C	453		CKSQYB224K16
C	454		CKSQYB224K16
C	455		CKSQYB473K25
C	456		CKSQYB224K16
C	457		CKSQYB332K50
C	458		CCSQCH101J50
C	459		CKSQYB104K16
C	460		CCSQCH471J50
C	461		CKSQYB104K16
C	463		CKSQYB104K16
C	464		CEJA100M16
C	465		CKSQYB334K16
C	466		CKSQYB104K16
C	467		CKSQYB104K16
C	468		CEJA100M16
C	469		CKSQYB104K16
C	501	(DEH-P8200R)	CEJA220M6R3
C	503	(DEH-P8200R)	CCSQCH270J50
C	504	(DEH-P8200R)	CCSQCH270J50
C	505	(DEH-P8200R)	CKSQYB104K16
C	506	(DEH-P8200R)	CKSQYB471K50
C	507	(DEH-P8200R)	CKSQYB471K50
C	508	(DEH-P8200R)	CKSQYB104K16
C	509	(DEH-P8200R)	CEJA220M6R3

=====Circuit Symbol and No.		===Part Name	Part No.
C	512	(DEH-P8200R)	CCSQCH101J50
C	513	(DEH-P8200R)	CCSQCH101J50
C	601	(DEH-P8200R)	CKSQYB104K16
C	601	(DEH-P8250)	CCSQCH101J50
C	602	(DEH-P8200R)	CKSQYB103K50
C	602	(DEH-P8250)	CCSQCH101J50
C	603		CEJA4R7M35
C	604		CCSQCH270J50
C	605		CCSQCH270J50
C	606		CKSQYB105K16
C	607		CKSQYB103K50
C	609		CKSQYB103K50
C	610	(DEH-P8250)	CCSQCH101J50
C	611		CCSQCH101J50
C	612		CKSQYB103K50
C	613	(DEH-P8200R)	CKSRYB103K50
C	613	(DEH-P8250)	CCSRCH101J50
C	683		CKSQYB103K50
C	686		CKSQYB473K25
C	801		CKSYB105K16
C	802		CKSQYB104K16
C	803		CEJA470M10
C	804		CCSQCH101J50
C	805		CCSCH101J50
C	807		CKSQYB102K50
C	831		CEJA470M16
C	832		CEJA101M16
C	833		CKSQYB104K16
C	834		CCSQCH331J50
C	835		CEJA470M25
C	836	4.7µF/25V	CCG1111
C	837		CKSQYB473K25
C	838		CKSYB224K25
C	901		CKSYB473K50
C	911		CEHAT102M16
C	912		CKSQYB473K25
C	913		CKSQYB103K50
C	914		CEJA470M10
C	916		CKSQYB102K50
C	921	330µF/10V	CCH1181
C	922		CKSQYB103K50
C	923		CEJA101M16
C	931		CKSYB105K16
C	941		CKSQYB473K25
C	942		CKSYB225K16
C	981		CEJA220M16
C	991		CKSQYB473K25
C	992		CKSQYB102K50
C	993		CEHAR101M10

C Unit Number : CWM7268
Unit Name : Keyboard Unit

MISCELLANEOUS

IC	1901	IC	PD5554A
IC	1902	IC	PD8063A
IC	1903	HIC-Module	RS-140
IC	1904	IC	PD5536A
Q	1907	Transistor	2SD1664
Q	1908	Transistor	2SC4617
D	1901	Diode	DAP202U
D	1902	Diode	DAN202U
D	1904	Diode	1SS355
D	1911	LED	CL170PGCD
D	1914	LED	CL170UBX
D	1916	LED	CL170UBX
D	1917	Diode	DAN202U
L	1901	Chip-Inductor	LCTA2R2J3225
L	1904	Chip-Inductor	LCTA2R2J3225

=====Circuit Symbol and No.		===Part Name	Part No.
L	1905	Inductor	LCTA220J2520
L	1906	Inductor	CTF1421
L	1907	Inductor	CTF1421
L	1908	Inductor	LCTA220J2520
L	1909	Inductor	CTF1484
L	1910	Inductor	CTF1410
L	1911	Inductor	CTF1410
TH	1901	Thermistor	CCX1037
X	1901	Ceramic Resonator 15.62MHz	CSS1458
S	1901		CSG1112
S	1903	Spring Switch	CSN1052
S	1904	Spring Switch	CSN1051
S	1906	Push Switch	CSG1112
S	1907	Push Switch	CSG1112
S	1908	Push Switch	CSG1112
S	1909	Push Switch	CSG1112
S	1910	Push Switch	CSG1112
S	1911	Push Switch	CSG1112
S	1912	Push Switch	CSG1112
S	1913	Push Switch	CSG1112
S	1914	Push Switch	CSG1112
S	1915	Push Switch	CSG1112
S	1916	Push Switch	CSG1112
S	1917	Push Switch	CSG1112
S	1918	Push Switch	CSG1112
S	1919	Push Switch	CSG1112
S	1920	Push Switch	CSG1112
S	1922	Push Switch	CSG1112
S	1923	Push Switch	CSG1112
S	1924	Push Switch	CSG1112
S	1930	Switch	CSD1040
VR	1902	Semi-fixed 22kΩ(B)	CCP1231
		OEL Unit	MXR8004

RESISTORS

R	1901		RS1/16S154J
R	1902		RS1/16S473J
R	1903		RAB4C101J
R	1906		RS1/16S102J
R	1907		RS1/16S473J
R	1908		RA3C101J
R	1909		RS1/16S101J
R	1910		RAB4C101J
R	1911		RAB4C101J
R	1912		RAB4C101J
R	1913		RAB4C101J
R	1914		RAB4C101J
R	1915		RAB4C101J
R	1918		RS1/16S101J
R	1921		RAB4C102J
R	1922		RS1/10S121J
R	1923		RS1/10S2R2J
R	1924		RS1/8S222J
R	1925		RS1/8S222J
R	1928		RS1/16S102J
R	1929		RS1/16S102J
R	1930		RS1/10S222J
R	1931		RS1/16S101J
R	1932		RS1/16S333J
R	1933		RS1/16S623J
R	1934		RS1/16S393J
R	1935		RS1/16S362J
R	1956		RS1/10S0R0J
R	1960		RS1/8S910J
R	1961		RS1/10S560J

=====Circuit Symbol and No.	===Part Name	Part No.
R 1962		RS1/10S560J
R 1963		RS1/10S560J
R 1964		RS1/10S560J
R 1965		RS1/10S560J
R 1989		RS1/16S222J
R 1990		RS1/16S472J
R 1991		RS1/16S101J
R 1992		RS1/16S101J
R 1993		RS1/16S101J
R 1994		RS1/16S101J
R 1995		RS1/16S101J
R 1996		RS1/16S101J
R 1997		RS1/16S473J
R 1998		RS1/16S103J

CAPACITORS

C 1901		CKSYB105K16
C 1902		CKSRYB103K50
C 1903		CSZSR100M16
C 1904		CSZSR100M6R3
C 1906		CKSRYB103K50
C 1907		CCSCH101J50
C 1908		CKSQYB473K16
C 1913		CSZSR100M16
C 1919		CKSRYB104K16
C 1920		CKSRYB104K16
C 1921		CKSRYB104K16
C 1922		CKSRYB104K16
C 1926		CKSQYB104K25
C 1927		CKSQYB104K25
C 1928		CKSQYB104K25
C 1929		CKSRYB104K16
C 1936		CKSQYB104K25
C 1937		CKSRYB104K16
C 1938		CKSRYB104K16
C 1940		CCSCH101J50
C 1943	4.7µF/25V	CCG1111
C 1945		CKSQYB104K50
C 1946		CKSQYB104K50
C 1947		CKSRYB103K50
C 1948		CKSRYB103K50
C 1949		CCSQCH101J50

F Unit Number : CWM7157
Unit Name : Panel PCB Unit

D	920	LED	CL220PGC
D	921	LED	CL220PGC
S	930	Push Switch(EJECT)	CSG1112

D Unit Number : CWX2419
Unit Name : Control Unit

MISCELLANEOUS

IC	201	IC	UPD63711GC
IC	301	IC	BA5985FM
IC	701	IC	BA05SFP
Q	101	Transistor	2SB1132
D	801	Chip LED	CL200IRX
D	802	Chip LED	CL200IRX
X	201	Ceramic Resonator 16.934MHz	CSS1456
S	801	Spring Switch(HOME)	CSN1051
S	802	Spring Switch(CLAMP)	CSN1052

=====Circuit Symbol and No.	===Part Name	Part No.

RESISTORS

R 101		RS1/8S120J
R 102		RS1/8S100J
R 103		RS1/16S222J
R 201		RS1/16S104J
R 202		RS1/16S103J
R 203		RS1/16S393J
R 204		RS1/16S103J
R 205		RS1/16S103J
R 206		RS1/16S182J
R 207		RS1/16S123J
R 302		RS1/16S153J
R 303		RS1/16S103J
R 501		RS1/16S102J
R 502		RA4C681J
R 601		RS1/16S102J
R 602		RS1/16S102J
R 605		RS1/16S0R0J
R 606		RS1/16S0R0J
R 801		RS1/8S751J
R 803		RS1/8S751J
R 901		RS1/16S681J
R 903		RS1/16S0R0J
R 904		RS1/16S681J
R 905		RS1/16S681J

CAPACITORS

C 101		CKSRYB102K50
C 102		CKSRYB104K16
C 103		CEV101M6R3
C 104		CEV470M6R3
C 105		CKSQYB334K16
C 106		CKSQYB334K16
C 107		CKSQYB334K16
C 201		CKSRYB104K16
C 202		CKSRYB471K50
C 203		CKSRYB104K16
C 205		CEV101M6R3
C 206		CKSRYB104K16
C 207		CKSRYB104K16
C 208		CKSRYB104K16
C 209		CKSRYB104K16
C 210		CKSRYB332K50
C 211		CKSRYB104K16
C 212		CKSRYB104K16
C 213		CKSRYB392K50
C 214		CKSRYB104K16
C 215		CKSRYB104K16
C 216		CCSRCJ3R0C50
C 217		CCSRCH270J50
C 218		CKSRYB104K16
C 219		CCSRCH181J50
C 220		CCSRCH510J50
C 221		CKSRYB682K25
C 222		CEV220M6R3
C 223		CKSRYB103K25
C 224		CKSRYB224K10
C 301		CEV101M10
C 603		CCSQSL152J50
C 604		CCSQSL152J50
C 702		CCH1349
C 703		CKSQYB334K16

=====Circuit Symbol and No.	===	Part Name	Part No.

E Unit Number : CWX2271
Unit Name : Photo Unit(S8)

Q	1	Photo-transistor	CPT230SX-TU
Q	2	Photo-transistor	CPT230SX-TU

Miscellaneous Parts List

		Pickup Unit(Service)(P8)	CXX1285
M	1	Motor Unit(CARRIAGE)	CXB2190
M	2	Motor Unit(LOADING)	CXB2195
M	3	Motor Unit(SPINDLE)	CXB2562

6. ADJUSTMENT

6.1 CD ADJUSTMENT

1) Precautions

- This unit uses a single power supply (+5V) for the regulator. The signal reference potential, therefore, is connected to REFO(approx. 2.5V) instead of GND.
  If REFO and GND are connected to each other by mistake during adjustments, not only will it be impossible to measure the potential correctly, but the servo will malfunction and a severe shock will be applied to the pick-up. To avoid this, take special note of the following.
  Do not connect the negative probe of the measuring equipment to REFO and GND together. It is especially important not to connect the channel 1 negative probe of the oscilloscope to REFO with the channel 2 negative probe connected to GND.
  Since the frame of the measuring instrument is usually at the same potential as the negative probe, change the frame of the measuring instrument to floating status.
  If by accident REFO comes in contact with GND, immediately switch the regulator or power OFF.

- Always make sure the regulator is OFF when connecting and disconnecting the various filters and wiring required for measurements.

- Before proceeding to further adjustments and measurements after switching regulator ON, let the player run for about one minute to allow the circuits to stabilize.

- Since the protective systems in the unit's software are rendered inoperative in test mode, be very careful to avoid mechanical and /or electrical shocks to the system when making adjustment.

- Disc detection during loading and eject operations is performed by means of a photo transistor in this unit.Consequently, if the inside of the unit is exposed to a strong light source when the outer casing is removed for repairs or adjustment, the following malfunctions may occur.
  *During PLAY, even if the eject button is pressed,the disc will not be ejected and the unit will remain in the PLAY mode.
  *The unit will not load a disc.
  When the unit malfunctions this way, either re-position the light source, move the unit or cover the photo transistor.

2) Test Mode

This mode is used for adjusting the CD mechanism module of the device.

- Test mode starting procedure
  Reset while pressing the **4** and **6** keys together.

- Test mode cancellation
  Switch ACC, back-up OFF.

- After pressing the EJECT key, do not press any other key until the disk is completely ejected.

- If the ► or ◄ key is pressed while focus search is in progress, immediately turn the power off (otherwise the actuator may be damaged due to adhesion of the lenses).

- Jump operation of TRs other than 100TR continues after releasing the key. CRG move and 100TR jump operations are brought into the “Tracking close” status when the key is released.

- Powering Off/On resets the jump mode to “Single TR (91)”, the RF AMP gain setting to 0 dB, and the automatic adjustment value to the initial value.

● Flow Chart

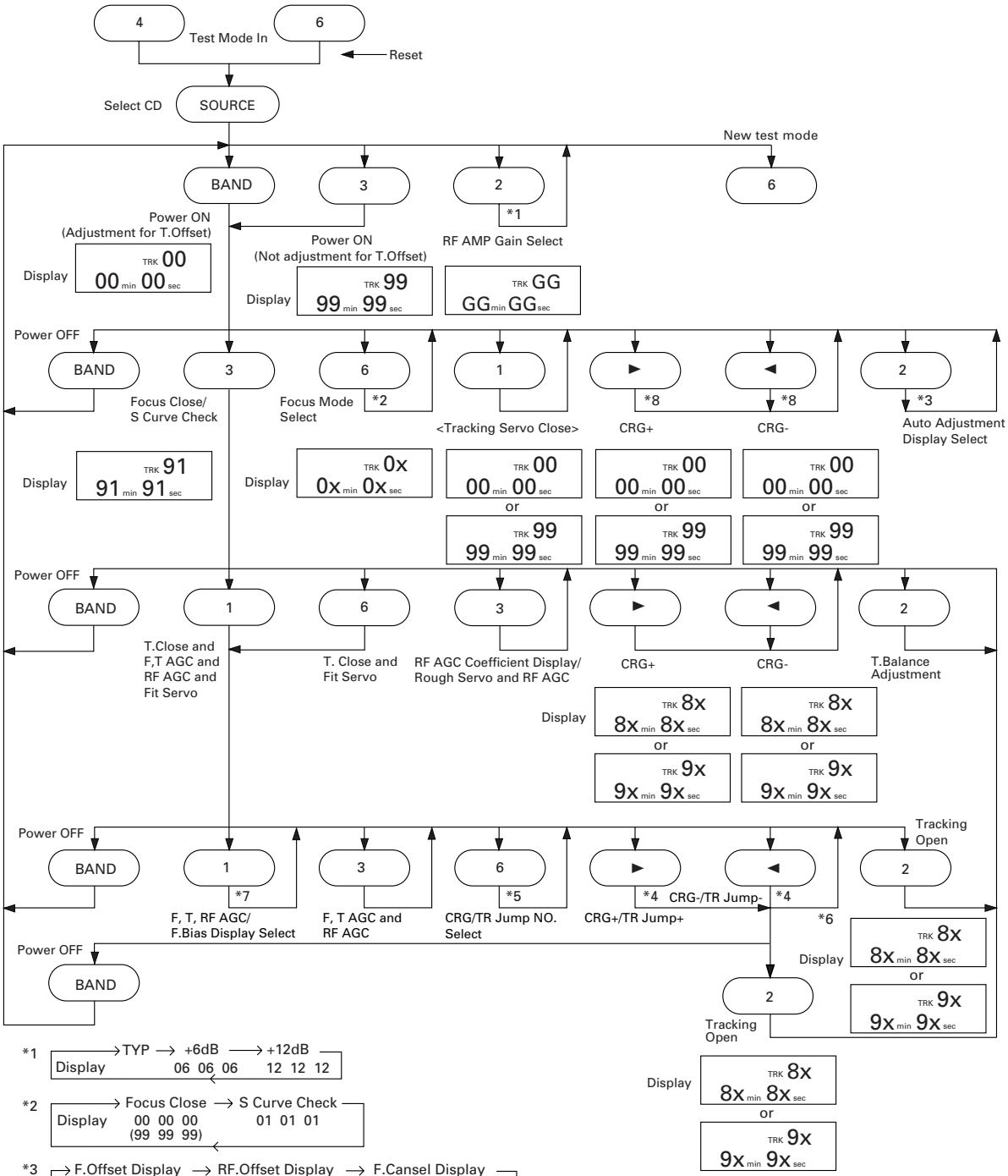

*1 → TYP → +6dB → +12dB →
Display 06 06 06 12 12 12

*2 → Focus Close → S Curve Check →
Display 00 00 00 01 01 01
(99 99 99)

*3 → F.Offset Display → RF.Offset Display → F.Cansel Display →

F.Cancel Value = {Top Rank 8bit of Set Value (7F [H] to 80 [H]) + 128} / 4
= 63 [D] to (32 [D]) to 00 [D]

*4 Single TR/32TR/100TR

*5 → Single TR → 32TRK → 100TRK → CRG Move →
Display 9x(8x):91(81) 92(82) 93(83) 94(84)

*6 CRG Move, 100TR Jump Only

*7 → TRK, MIN, SEC → F.AGC Gain → T.AGC Gain → RF AGC Gain →
(F,T.AGC Gain = (Present Value/Initial Value) × 20)

*8 Voltage of CRG Motor = 2 [V]

6.2 CHECKING THE GRATING AFTER CHANGING THE PICKUP UNIT

• **Note :**
The grating angle of the PU unit cannot be adjusted after the PU unit is changed. The PU unit in the CD mechanism module is adjusted on the production line to match the CD mechanism module and is thus the best adjusted PU unit for the CD mechanism module. Changing the PU unit is thus best considered as a last resort. However, if the PU unit must be changed, the grating should be checked using the procedure below.

• **Purpose :**
To check that the grating is within an acceptable range when the PU unit is changed.

• **Symptoms of Mal-adjustment :**
If the grating is off by a large amount symptoms such as being unable to close tracking, being unable to perform track search operations, or taking a long time for track searching.

• **Method :**

• Measuring Equipment	• Oscilloscope, Two L.P.F.
• Measuring Points	• E, F, REFOUT
• Disc	• ABEX TCD-784
• Mode	• TEST MODE

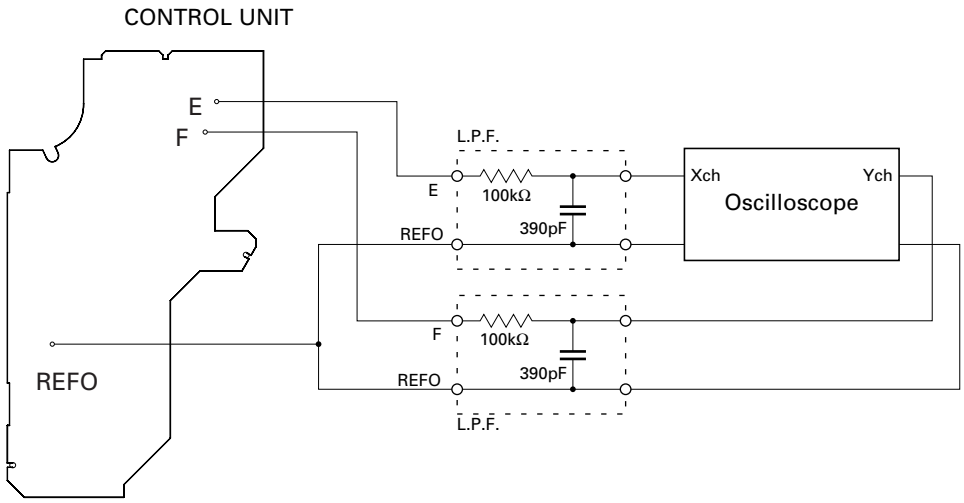

• **Checking Procedure**
1. In test mode, load the disc and switch the 5V regulator on.
2. Using the ► and ◄ buttons, move the PU unit to the innermost track.
3. Press key **3** to close focus, the display should read "91". Press key **2** to implement the tracking balance adjustment the display should now read "81". Press key **3** 2 times. The display will change, returning to "81" on the fourth press.
4. As shown in the diagram above, monitor the LPF outputs using the oscilloscope and check that the phase difference is within 75° . Refer to the photographs supplied to determine the phase angle.
5. If the phase difference is determined to be greater than 75° try changing the PU unit to see if there is any improvement. If, after trying this a number of times, the grating angle does not become less than 75° then the mechanism should be judged to be at fault.

• **Note**
Because of eccentricity in the disc and a slight misalignment of the clamping center the grating waveform may be seen to "wobble" (the phase difference changes as the disc rotates). The angle specified above indicates the average angle.

• **Hint**
Reloading the disc changes the clamp position and may decrease the "wobble".

Grating waveform

Ech → Xch 20mV/div, AC
Fch → Ych 20mV/div, AC

0°

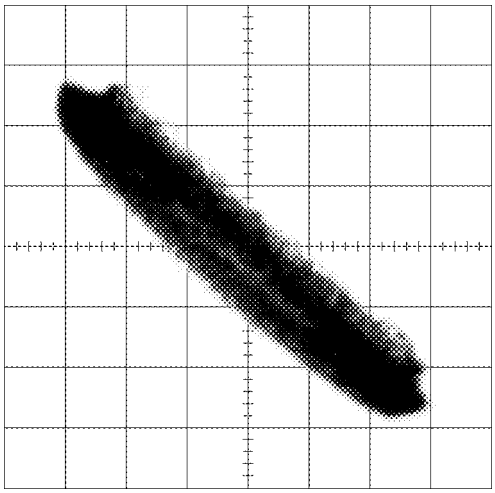

30°

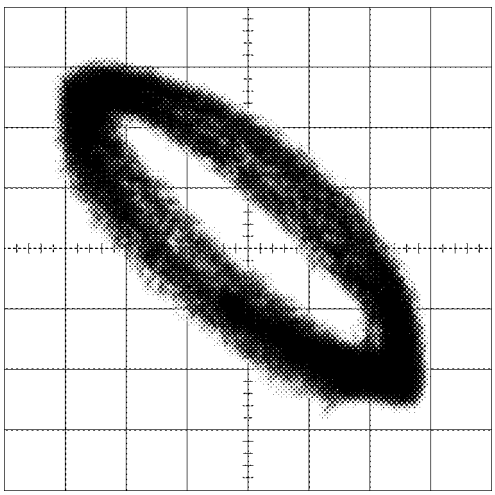

45°

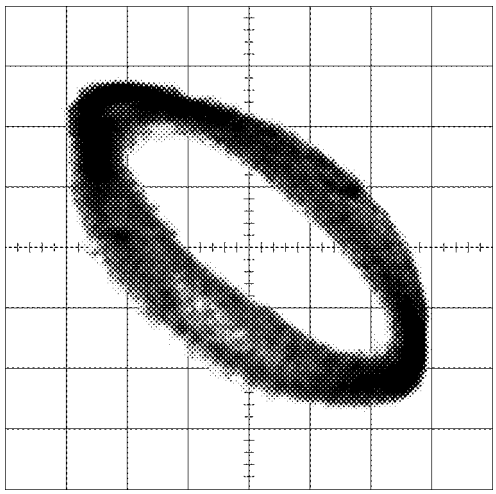

60°

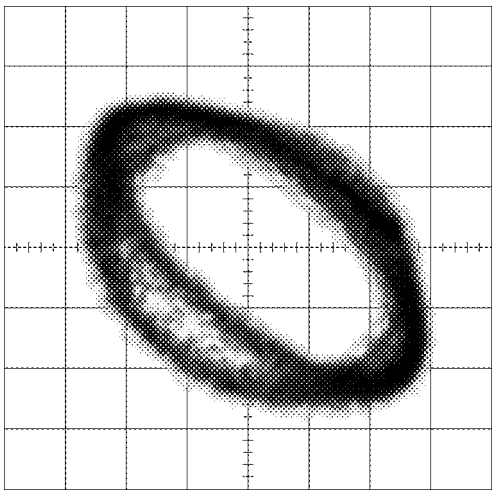

75°

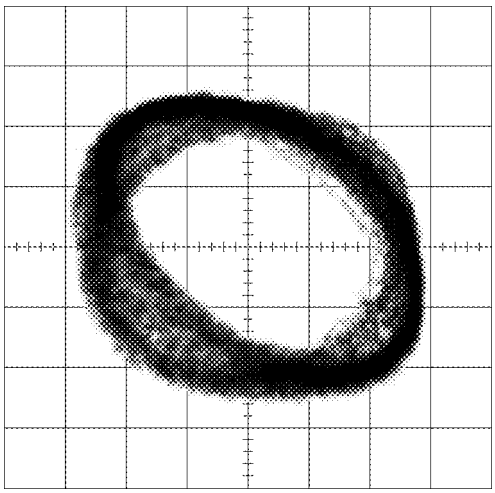

90°

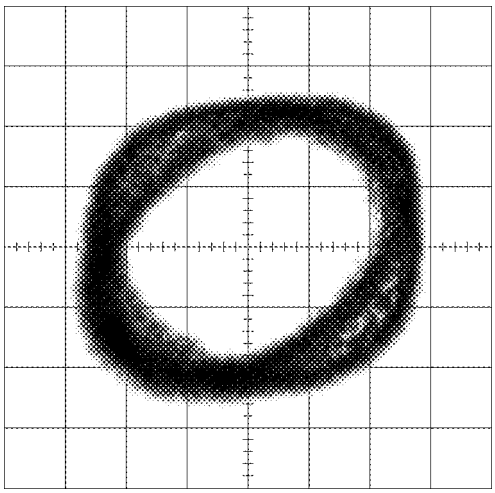

6.3 OEL UNIT ADJUSTMENT

● **Adjustment point**

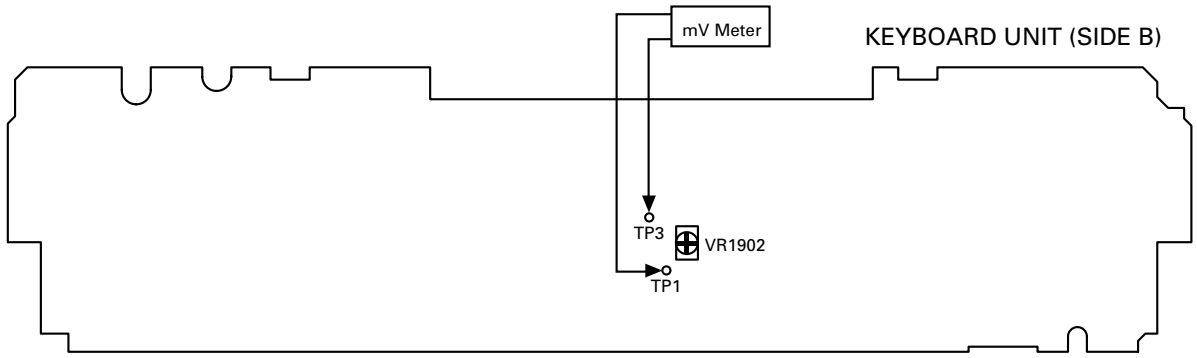

<When the OEL Unit has been replaced>

1. ACC ON while pressing the 1 and 3 keys together after RESET START.
2. Pressing the 1 and 3 keys together after SOURCE ON. (All indication lighting mode)
3. Use VR1902 to adjust the difference in potential between TP1 and TP3(GND) to 1.07V.

- All indication lighting mode cancellation
  Switch ACC, back-up OFF.

7. GENERAL INFORMATION

7.1 DIAGNOSIS

7.1.1 TEST MODE

● Error Messages

If a CD is not operative or stopped during operation due to an error, the error mode is turned on and cause(s) of the error is indicated with a corresponding number. This arrangement is intended at reducing nonsense calls from the users and also for facilitating trouble analysis and repair work in servicing.

(1) Basic Indication Method

1) When SERRORM is selected for the CSMOD (CD mode area for the system), error codes are written to DMIN (minutes display area) and DSEC (seconds display area). The same data is written to DMIN and DSEC. DTNO remains in blank as before.

2) Head unit display examples

Depending on display capability of LCD used, display will vary as shown below. xx contains the error number.

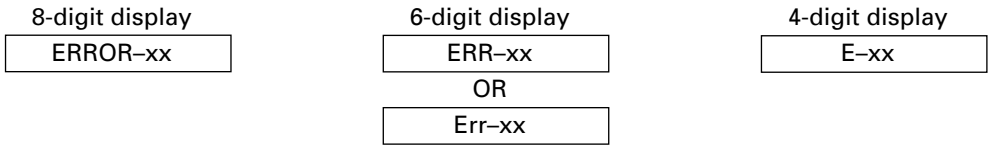

(2) Error Code List

Code	Class	Displayed error code	Description of the code and potential cause(s)
10	Electricity	Carriage Home NG	CRG can't be moved to inner diameter. CRG can't be moved from inner diameter. → Failure on home switch or CRG move mechanism.
11	Electricity	Focus Servo NG	Focusing not available. → Stains on rear side of disc or excessive vibrations on REWRITABLE.
12	Electricity	Spindle Lock NG	Spindle not locked. Sub-code is strange (not readable). → Failure on spindle, stains or damages on disc, or excessive vibrations.
		Subcode NG	A disc not containing CD-R data is found. Turned over disc are found, though rarely. → Failure on home switch or CRG move mechanism.
		RF AMP NG	An appropriate RF AMP gain can't be determined. → CD signal error.
17	Electricity	Setup NG	APC protection doesn't work. Focus can be easily lost. → Damages or stains on disc, or excessive vibrations.
30	Electricity	Search Time Out	Failed to reach target address. → CRG tracking error or damages on disc.
A0	System	Power Supply NG	Power (VD) is ground faulted. → Failure on SW transistor or power supply (failure on connector).

Remarks: Mechanical errors are not displayed (because a CD is turned off in these errors).

Unreadable TOC does not constitute an error. An intended operation continues in this case.

A newly designed head unit must conform to the example given above.

Upper digits of an error code are subdivided as shown below:

1x: Setup relevant errors, 3x: Search relevant errors, 3x: Search relevant errors, Ax: Other errors.

● New Test Mode

S-CD plays the same way as before.

If an error such as off focus, spindle unlocking, unreadable sub-code, or sound skipping occurs after setup, its cause and time occurred (in absolute time) are displayed.

During setup, operational status of the control software (internal RAM: CPOINT) is displayed.

These displays and functions are prepared for enhancing aging in the servicing and efficiency of trouble analysis.

(1) Shifting to the New Test Mode

① Turn on the current test mode by starting the reset from the key.

② Select S-CD for the source through the specified procedure including use of the [SOURCE] key, and inserting the disc. Then, press the [Jump Mode Selector] key while maintaining the regulator turned off.

③ After the above operations, the new test mode remains on irrespective of whether the S-CD is turned on or off. You can reset the new test mode by turning on the reset start.

* With some products, the new test mode can be reset through the same operations as that employed for shifting to the STBY mode (while maintaining the Acc turned off).

(2) Key Correspondence

Key	Test mode		New test mode	
(Example)	Power Off	Power On	In-play	Error Production
BAND	To power on (offset adjustment performed)	To power off	–	Time/Err.No. switching
►	–	FWD-Kick	FF/TR+	–
◄	–	REV-Kick	REV/TR-	–
1	–	T.Close (AGC performed) /parameter display switching	Scan	–
2	RF AMP gain switching	Parameter display switching /T.BAL adjustment/T.Open	Mode	–
3	To power on (offset adjustment not performed)	F.Close/RF AGC/F.T.AGC	–	–
6	–	F.Mode switching /T.Close (no AGC)/Jump switching	Auto/Manu	T.No./Time switching

Note: Eject and CD on/off is performed in the same procedure as that for the normal mode.

(3) Cause of Error and Error Code

Code	Class	Contents	Description and cause
40	Electricity	Off focus detected.	FOK goes low. → Damages/stains on disc, vibrations or failure on servo.
41	Electricity	Spindle unlocked.	FOK = Low continued for 50 msec. → Damages/stains on disc, vibrations or failure on servo.
42	Electricity	Sub-code unreadable.	Sub-code was unreadable for 50 msec. → Damages/stains on disc, vibrations or failure on servo.
43	Electricity	Sound skipping detected.	Last address memory function was activated. → Damages/stains on disc, vibrations or failure on servo.

Note: Mechanical errors during aging are not displayed.
The error codes should be indicated in the same way as in the normal mode.

(4) Display of Operational Status (CPOINT) during Setup

Status No.	Contents	Protective action
00	CD+5V ON process in progress.	None
01	Servo LSI initialization (1/3) in progress.	None
02	Servo LSI CRAM initialization in progress.	None
03	Servo LSI initialization (2/3) in progress.	None
04	Offset adjustment (1/3) in progress.	None
05	Offset adjustment (2/3) in progress.	None
06	Offset adjustment (3/3) in progress.	None
07	FZD adjustment in progress.	None
08	Servo LSI initialization (3/3) in progress.	None
10	Carriage move to home position started.	None
11	Carriage move to home position started.	None
12	Carriage is moving toward inner diameter.	Specified 10 seconds has been passed or failure on home switch.
13	Carriage is moving toward outer diameter.	Specified 10 seconds has been passed or failure on home switch.
14	Carriage outer kick in progress.	None
15	Carriage outer diameter feed (1 second) in progress.	None
20	Servo close started.	None
21	Pre-processing for focus search started.	None
22	Spindle rotation and focus search started.	None
23	Waiting for focus close (XSI=Low).	Specified focus search time has been passed.
24	Standing by after focus close is over.	Specified focus search time has been passed.
25	Focus search preprocessing is in progress while setup protection is turned on.	None
26	Focus search preprocessing is in progress while focus recovery is turned on.	None
27	Wait time after focus close is set up.	Off focus.
28	Standing by after focus close is over.	Off focus.
29	Setup (1/2) before T balance adjustment is started.	Off focus.
30	Setup (2/2) before T balance adjustment is started.	Off focus.
31	T balance adjustment started.	Off focus.
32	T balance adjustment (1/2).	Off focus.
33	T balance adjustment (2/2).	Off focus.
34	Waiting for spindle rotation to end. Spindle rough servo.	Off focus.
35	Standing by after spindle rough servo is over.	Off focus.
36	RF AGC started.	Off focus.
37	RF AGC started.	Off focus.
38	RF AGC ending process in progress.	Off focus.
39	Tracking close in progress.	Off focus.
40	Standing by after tracking is closed. Carriage closing in progress.	Off focus.
41	Focus/tracking AGC started.	Off focus.
42	Focus AGC started.	Off focus.
43	Focus AGC in progress.	Off focus.
44	Tracking AGC in progress.	Off focus.
45	Standing by after focus/tracking AGC are over.	Off focus.
46	Spindle processes applicable servo.	Off focus.
47	Check for servo close is started.	Off focus.
48	Check of LOCK pin started.	Off focus or spindle not locked.
49	RF AGC started.	Off focus.
50	RF AGC in progress.	Off focus.
51	Standing by after RF AGC is over.	Off focus.

(5) Display Examples

1) During Setup (When status no. = 11)

TRK No.	MIN.	SEC.
11	11'	11"

2) During Operation (TOC read, TRK search, Play, FF and REV)

The same as in the normal mode.

3) When a Protection Error Occurred

Switch to the following displays (A) and (B) using the [BAND] switch:

(A) Error occurrence timing display in absolute time.

An example: Error occurred in 12th tune at 34'56" in absolute time.

TRK No.	MIN.	SEC.
12	34'	56"

(B) Error No. display

An example: Error #40 (Off focus is detected)

ERROR-40

7.1.2 DISASSEMBLY

● **Removing the Case Unit (not shown)**

Remove the Case Unit.

● **Removing the CD Mechanism Module (Fig.1)**

1 Remove the four screws.

Disconnect the connector and then remove the CD Mechanism Module (not shown).

● **Removing the Grille Assy (Fig.1)**

2 Remove the two screws.

Disconnect the two stoppers and then remove the Grille Assy (not shown).

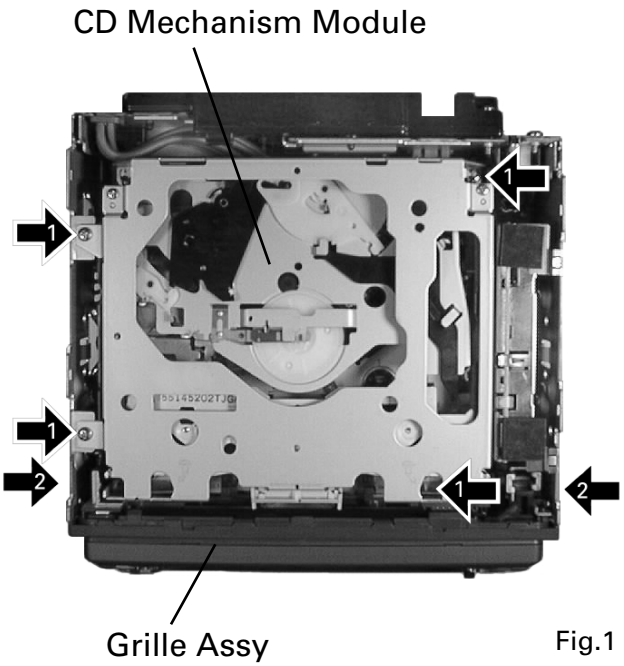

Fig.1

● **Removing the Tuner Amp Unit (Fig.2)**

1 Remove the three screws.

2 Remove the two screws.

3 Remove the screw.

4 Unbend the tabs at four locations indicated by arrow until straight.
Remove the Tuner Amp Unit.

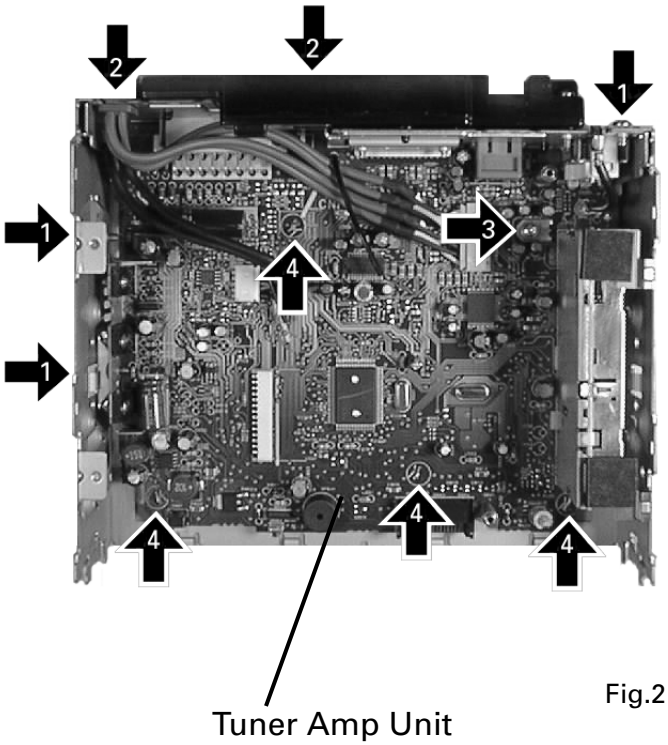

Fig.2

● Removing the OEL Unit

1. Apply hot air to the cable pins for the anode terminal using a blower used for removing a flat-packaged IC or something like that. When all the pins are peeling off from the P.C.board, pinch the cable with a pair of tweezers and remove it slowly from the P.C.board. (Fig.3)

* Be careful not to remove other electrical parts when you use a blower. Especially, when hot air is appropriated to the VR1902 too much, the volume will destroy.

* Flexible cable may not remove easily by transforming the Bosses by the hot air of the Blower.

2. Five tabs are extended until becoming straight in the direction of the arrow and then remove the Holder. (Fig.3)
3. Slowly set up the OEL Unit. At this time, the stress is prevented from hanging to flexible cable in the Cathode terminal. (Fig.4)
4. The Cathode terminal is removed according to the procedure same as the Anode terminal, and the OEL Unit is removed. (Fig.4)
5. Remove the Holder. (Remove after removing the Cathode terminal without fail.) (Fig.4)

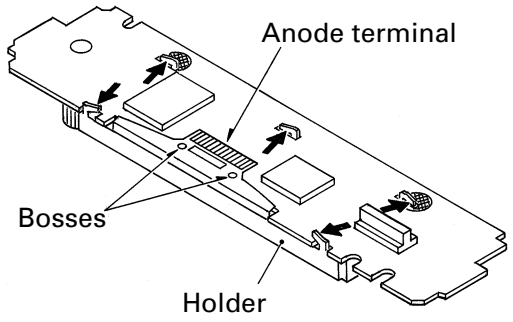

Fig.3

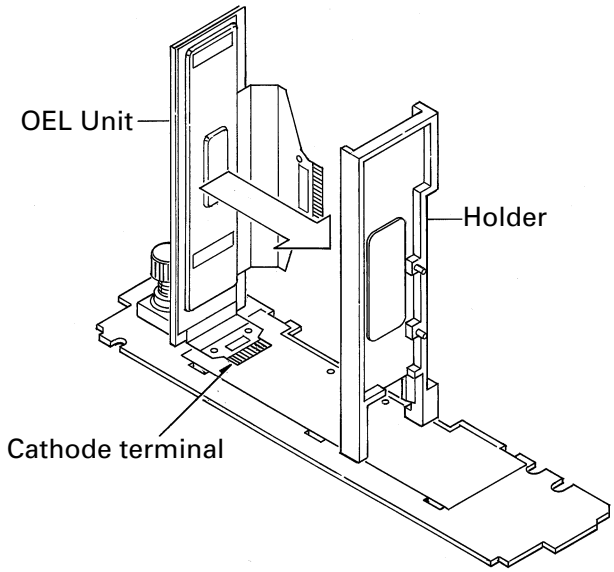

Fig.4

● Installing the OEL Unit

1. Install the Holder in the OEL Unit. (Fig.5)
2. When soldering the flexible cable for the Cathode terminal on the P.C.board, use a pair of tweezers. First, insert the tips of tweezers into 2 holes in the flexible cable, then into the 2 holes in the P.C.board. (Fig.5)
3. Position the flexible cable on the P.C.board so that their lands touch each other. (Fig.5)
4. Apply solder to each pin of the flexible cable. (Fig.5)

* Appropriate soldering iron lightly so that the stress should not hang to Flexible cable.

5. Lay down the OEL Unit. (Fig.5)
6. Install the Holder. (Fig.3)
7. When soldering the flexible cable for the Anode terminal on the P.C.board, first, insert the Bosses on the P.C.board into the 2 holes in the flexible cable. Then, take the same procedures 2 and 3 as that for the Cathode terminal to solder the cable pins. (Fig.3)

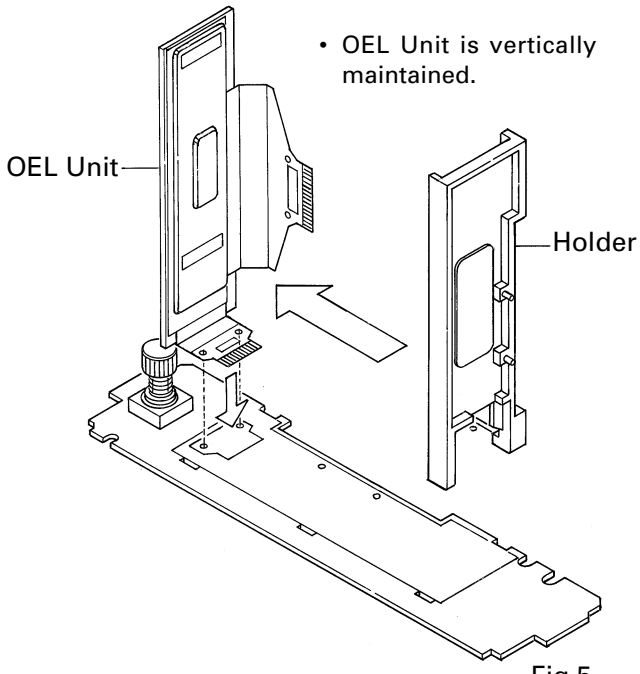

Fig.5

● Removing the Upper Frame

1. Remove six Springs A, two Springs B and four Screws.
2. Remove two Tabs situated on rear side of the Upper Frame, remove two Arms on the front side, then remove two Tabs on the front side.

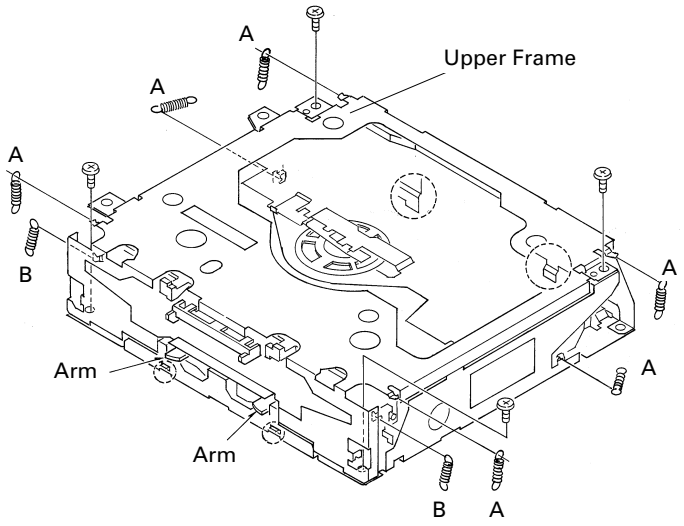

● Removing the Carriage Mechanism

1. Disengage the Carriage Mechanism from the two dampers situated in the front side by driving it up, then disengage and remove the mechanism from the one damper by driving it up aslant into front side direction.

Note : When assembling the Carriage Mechanism, coat the dampers with alcohol prior to the assembly.

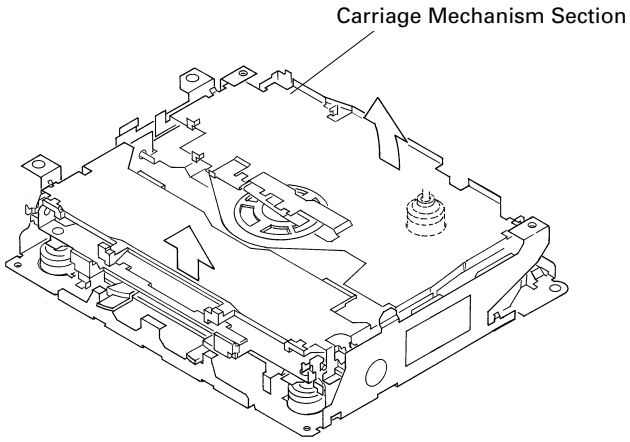

● Removing the Clamp Arm Assy

1. Remove a Spring A, a B and a Spring C.
2. Drive the Clamp Arm Assy up into rear side direction, then disengage the arm from its current position Finally, drive the assembly approximately 45 degrees upward, then slide the assembly toward right side to remove it.

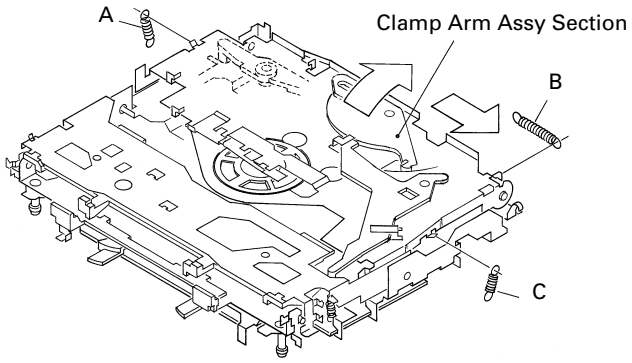

● Removing the Guide Arm Assy

1. Remove a connector, a spring A and B
2. Drive the Guide Arm Assy up aslant into rear side direction, then remove it from a Pin. Finally, drive the assembly approximately 45 degrees upward, then slide the assembly toward left side to remove it.

Note : When assembling the guide arm assembly, route the cord inside the assembly. In this operation, care must be exercised so that cord may be caught by the gear.

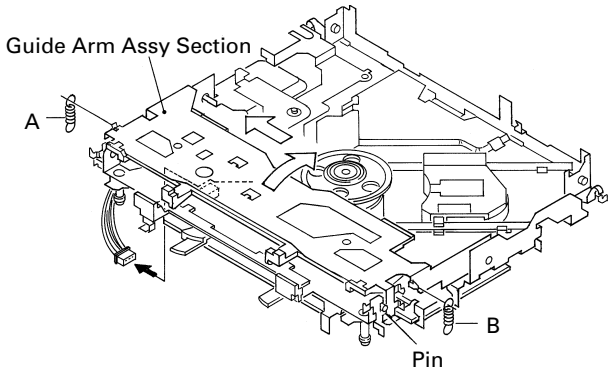

● Removing the LO Arm Assy

1. Remove two Pins to dismount the LO Arm Assy.

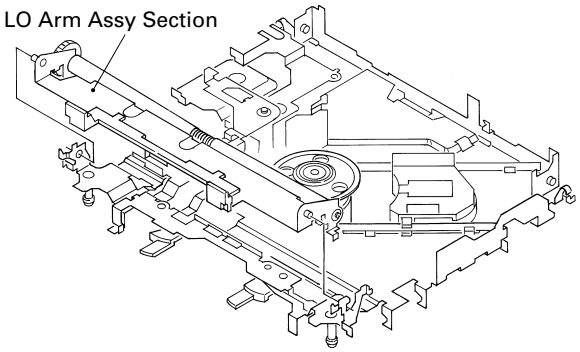

● Removing the Control Unit and the Spindle Motor

1. Remove from the connector after mounting the short pin on the flexible PCB of the pickup unit.
2. Remove two Soldered joints, then remove two Screws A.
3. Remove two connectors and a Screw B.
4. Disengage the Control Unit from two Tabs, then dismount the unit by sliding it toward left.
5. Dismount the Spindle Motor.

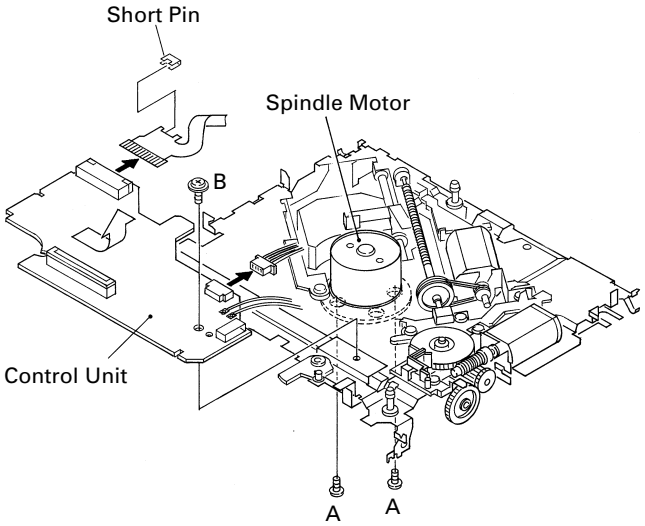

● Removing the Loading Motor and Carriage Motor

1. Remove the Spring and two Screws A.
2. Dismount the Loading Motor.
3. Remove the Belt, a Screw B, two Screws C, a Guide and a Screw Unit.
4. Dismount the Carriage Motor.

Note : When assembling the Belt, use care so that it may not be contaminated by grease.

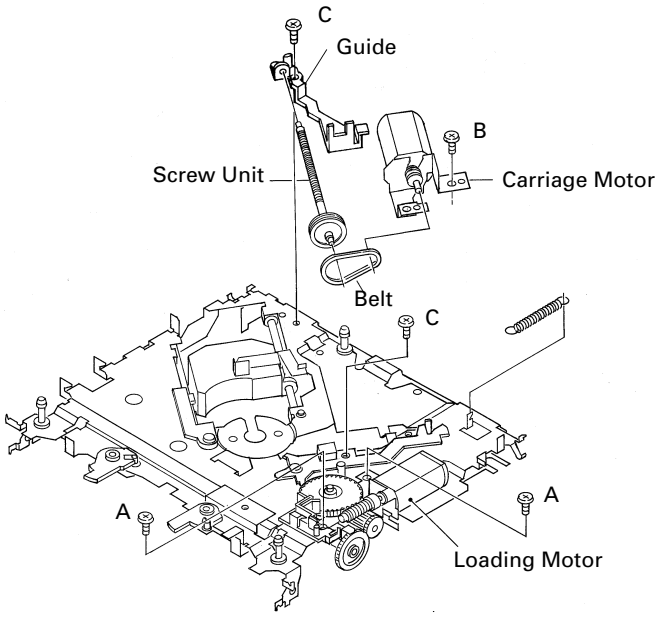

● Removing the Pickup Unit

1. Remove two Screws and a Shaft.
2. Dismount the Pickup Unit.

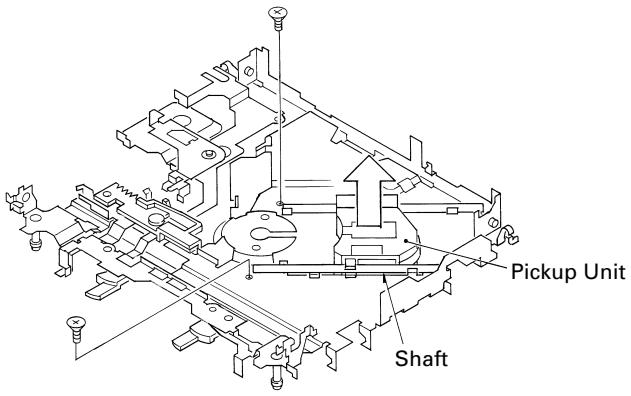

7.2 IC

PML004AF

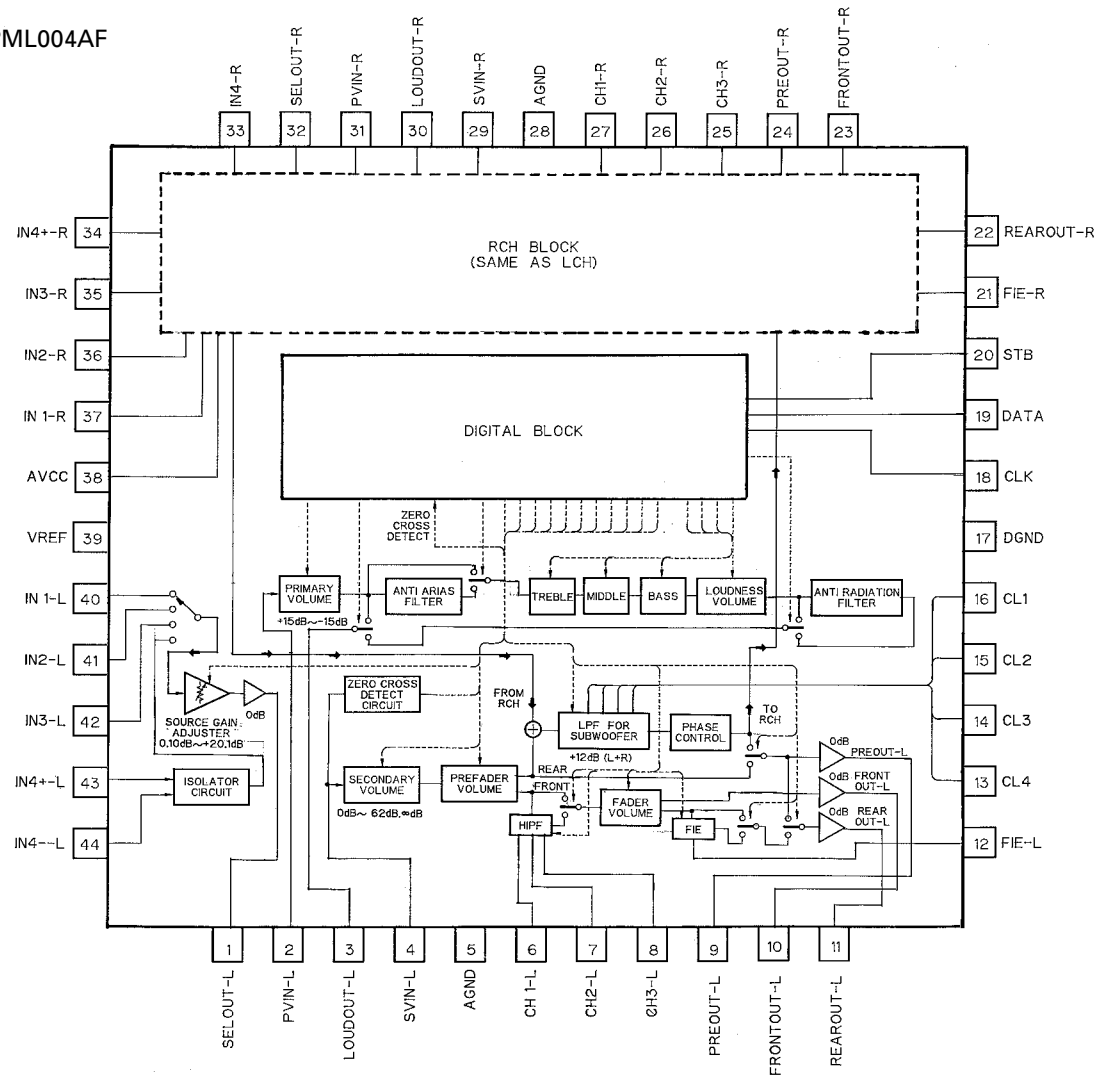

PA2028A

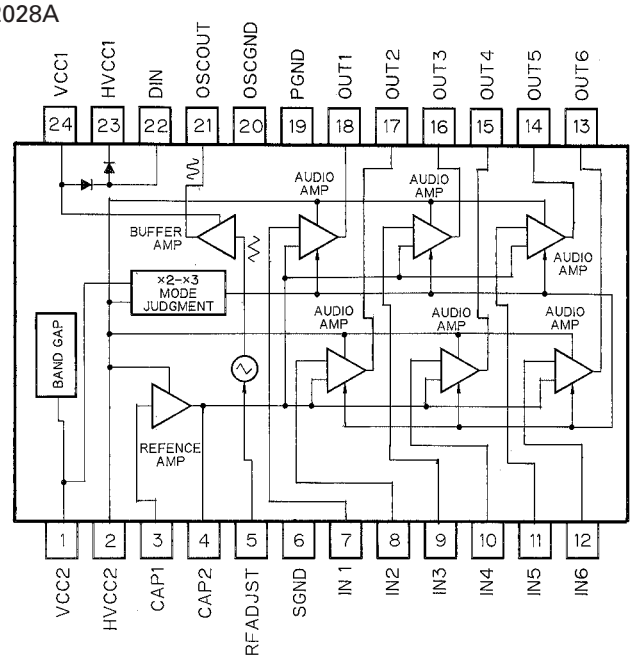

S-81250SGUP

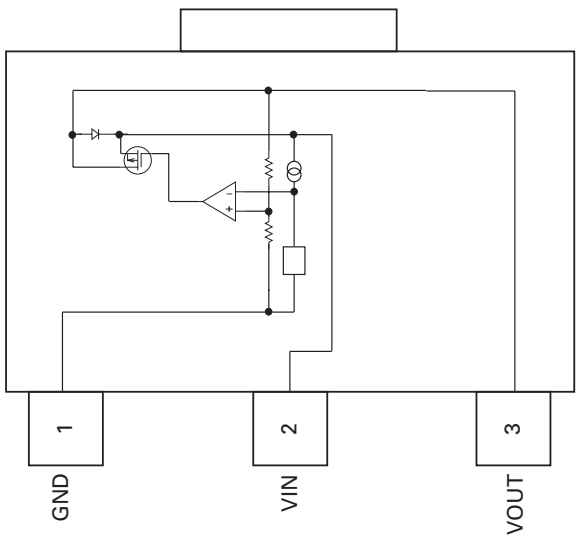

● **Pin Functions (PE5097A)**

Pin No.	Pin Name	I/O	Function and Operation
1	SWVDD	O	Grille chip enable output
2	DSENS	I	Grille detach sense input
3	ROT1	I	Rotary encoder input 1
4	ROT0	I	Rotary encoder input 0
5	TESTIN	I	Test program mode input
6	CSENS	I	Flap open/close sense input
7	TSTD	O	CD TEXT strobe output
8	TSCK	O	CD TEXT serial clock output
9	TSI	I	CD TEXT serial data input
10	TSO	O	CD TEXT serial data output
11	RESET	I	Reset input
12	XT2		Not used
13	XT1	I	Connect to VSS
14	VSS		GND
15	X2		Crystal oscillator connection pin
16	X1	I	Crystal oscillator connection pin
17	REGOFF		Regulator operation specification signal
18	REGC	I	Capacity connection for regulator output stability
19	VDD		Power supply
20	ILMPW	O	Illumination power supply control output
21	SYSPW	O	System power control output
22	ADPW	O	A/D converter power supply control output
23	OELPW	O	OEL power supply control output
24	IPPW	O	Power supply control output for IP BUS interface IC
25	ASENBO	O	Slave power supply control output
26	EJTIN	I	Eject key input
27	NC		Not used
28	MUTE	O	System mute output
29	FM/AM	O	Tuner decoder power supply control output
30	LOCL	O	Local L output
31	LOCH	O	Local H output
32	TUNPCE2	O	EEPROM chip enable output
33	VST	O	Strobe pulse output for electronic volume
34	VCK/ROMCLK	O	Clock output for electronic volume / ROM collection clock output
35	VDT/ROMDATA	O	Data output for electronic volume / ROM collection data output
36	ROMCS	O	ROM collection chip select output
37	FLPILM	O	Flap illumination output
38	SD	I	Station detector input
39	ST	I	FM stereo input
40	VSS		GND
41	VDD		Power supply
42	ISENS	I	Illumination sense input
43	DRST	O	RDS decoder reset output
44	RDSLK	I	RDS LK input
45	RDT	I	RDS data input
46	DLED	O	Alarm LED output
47	DRELAY	O	External relay control output
48	DRSENS	I	Door open/close sense input
49	DRSYS	O	Door system select output
50	NC		Not used
51	DFSSW	O	Voice select control output
52	NC		Not used
53	TELSW	O	HANDS FREE power supply control output
54	TELIN	I	Cellular mute input
55	CD5VON	O	CD +5V power supply control output
56	CONT	O	CD servo driver power supply control
57	VDCONT	O	CD VD power control output
58	CDEJET	O	CD load motor eject control output

Pin No.	Pin Name	I/O	Function and Operation
59	CDLOAD	O	CD LOAD motor loading control output
60	LOCK	I	CD spindle lock detector input
61	FOK	I	CD focus OK signal input
62	PCL	O	Clock adjustment output
63	CLAMP	I	CD disc clamp input
64	XSTB	O	CD LSI strobe output
65	XSCK	O	CD LSI clock output
66	XSI	I	CD LSI data input
67	XSO	O	CD LSI data output
68	XAO	O	CD LSI command / data control output
69	XRST	O	CD LSI reset control output
70	SMPXS0	O	Multiplexor select output 0
71	SMPXS1	O	Multiplexor select output 1
72	SMPXS2	O	Multiplexor select output 2
73	TEST(GND)	I	GND
74	SL	I	Signal level input
75	SAIN	I	Spectrum analyzer input
76,77	NC	I	Not used
78	EJTSNS	I	CD disc EJECT position detect
79	DSCSNS	I	CD disc insert sense input
80	VDSENS	I	VD voltage sense input
81	TEMP	I	Temperature sense input (CD)
82	AVDD		A/D converter power supply terminal
83	AVREF		A/D converter reference voltage terminal
84	AVSS		GND
85	RX	I	IP BUS data input
86	TX	O	IP BUS data output
87	NMI		GND
88	NC	I	Not used
89	RCK	I	RDS clock input
90	NC	I	Not used
91	PACK	I	CD TEXT pack synchronism input
92	ASENS	I	ACC power sense input
93	BSENS	I	Back up power sense input
94	TUNPDI	I	PLL IC data input
95	KYDT	I	Grille data input
96	DPDT	O	Grille data output
97	TUNPCK	O	PLL IC clock output
98	TUNPDO	O	PLL IC data output
99	TUNPCE	O	PLL IC chip enable output
100	PEE	O	Beep tone output

*PE5097A

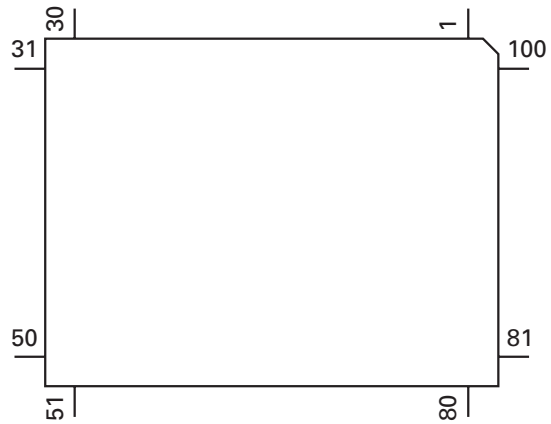

IC's marked by* are MOS type.
Be careful in handling them because they are very liable to be damaged by electrostatic induction.

● **Pin Functions (PE5099A)**

Pin No.	Pin Name	I/O	Function and Operation
1	SWVDD	O	Grille chip enable output
2	DSENS	I	Grille detach sense input
3	ROT1	I	Rotary encoder input 1
4	ROT0	I	Rotary encoder input 0
5	TESTIN	I	Test program mode input
6	CSENS	I	Flap open/close sense input
7	TSTD	O	CD TEXT strobe output
8	TSCK	O	CD TEXT serial clock output
9	TSI	I	CD TEXT serial data input
10	TSO	O	CD TEXT serial data output
11	RESET	I	Reset input
12	XT2		Not used
13	XT1	I	Connect to VSS
14	VSS		GND
15	X2		Crystal oscillator connection pin
16	X1	I	Crystal oscillator connection pin
17	REGOFF		Regulator operation specification signal
18	REGC	I	Capacity connection for regulator output stability
19	VDD		Power supply
20	ILMPW	O	Illumination power supply control output
21	SYSPW	O	System power control output
22	ADPW	O	A/D converter power supply control output
23	OELPW	O	OEL power supply control output
24	IPPW	O	Power supply control output for IP BUS interface IC
25	ASENBO	O	Slave power supply control output
26	EJTIN	I	Eject key input
27	NC		Not used
28	MUTE	O	System mute output
29	FM/AM	O	Tuner decoder power supply control output
30	LOCL	O	Local L output
31	LOCH	O	Local H output
32	TUNPCE2	O	EEPROM chip enable output
33	VST	O	Strobe pulse output for electronic volume
34	VCK/ROMCLK	O	Clock output for electronic volume / ROM collection clock output
35	VDT/ROMDATA	O	Data output for electronic volume / ROM collection data output
36	ROMCS	O	ROM collection chip select output
37	FLPILM	O	Flap illumination output
38	SD	I	Station detector input
39	ST	I	FM stereo input
40	VSS		GND
41	VDD		Power supply
42	ISENS	I	Illumination sense input
43	MOSENS	I	Motion/window damage sensor input
44	DLSENS	I	Door lock sense input
45	STCUT	O	Starter output
46	DLED	O	Alarm LED output
47	DRELAY	O	External relay control output
48	DRSENS	I	Door open/close sense input
49	DRSYS	O	Door system select output
50	NC		Not used
51	DFSSW	O	Voice select control output
52	NC		Not used
53	TELSW	O	MIC control output
54	TELIN	I	Cellular mute input
55	CD5VON	O	CD +5V power supply control output
56	CONT	O	CD servo driver power supply control
57	VDCONT	O	CD VD power control output
58	CDEJET	O	CD load motor eject control output

Pin No.	Pin Name	I/O	Function and Operation
59	CDLOAD	O	CD LOAD motor loading control output
60	LOCK	I	CD spindle lock detector input
61	FOK	I	CD focus OK signal input
62	PCL	O	Clock adjustment output
63	CLANP	I	CD disc clamp input
64	XSTB	O	CD LSI strobe output
65	XSCK	O	CD LSI clock output
66	XSI	I	CD LSI data input
67	XSO	O	CD LSI data output
68	XAO	O	CD LSI command / data control output
69	XRST	O	CD LSI reset control output
70	SMPXS0	O	Multiplexor select output 0
71	SMPXS1	O	Multiplexor select output 1
72	SMPXS2	O	Multiplexor select output 2
73	TEST(GND)	I	GND
74	SL	I	Signal level input
75	SAIN	I	Spectrum analyzer input
76	NC	I	Not used
77	MODEL	I	Model select input
78	EJTSNS	I	CD disc EJECT position detect
79	DSCSNS	I	CD disc insert sense input
80	VDSENS	I	VD voltage sense input
81	TENP	I	Temperature sense input (CD)
82	AVDD		A/D converter power supply terminal
83	AVREF		A/D converter reference voltage terminal
84	AVSS		GND
85	RX	I	IP BUS data input
86	TX	O	IP BUS data output
87	NMI		GND
88-90	NC		Not used
91	PACK	I	CD TEXT pack synchronism input
92	ASENS	I	ACC power sense input
93	BSENS	I	Back up power sense input
94	TUNPDI	I	PLL IC data input
95	RXD	I	Grille data input
96	TXD	O	Grille data output
97	TUNPCK	O	PLL IC clock output
98	TUNPDO	O	PLL IC data output
99	TUNPCE	O	PLL IC chip enable output
100	PEE	O	Beep tone output

*PE5099A

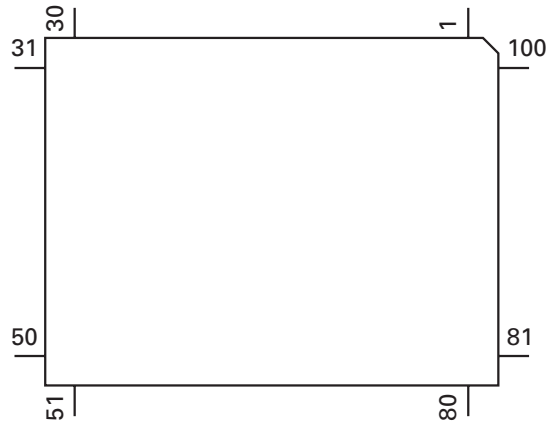

NJM2360M

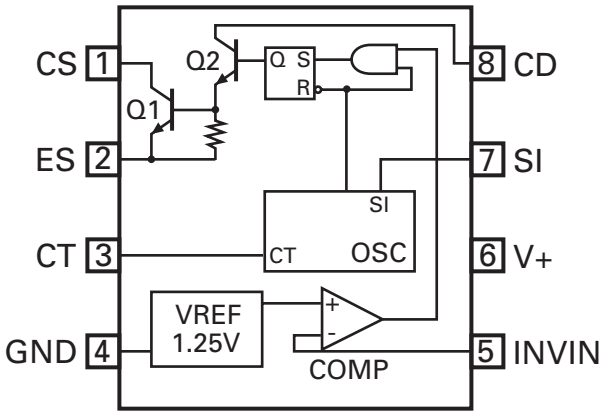

S-875037BUPABE

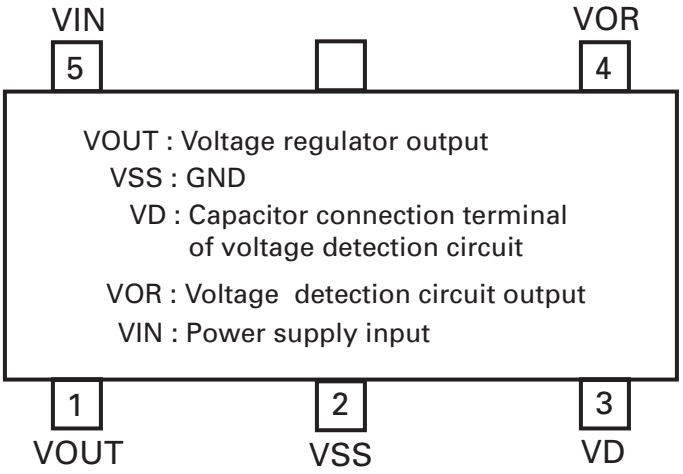

PD8063A

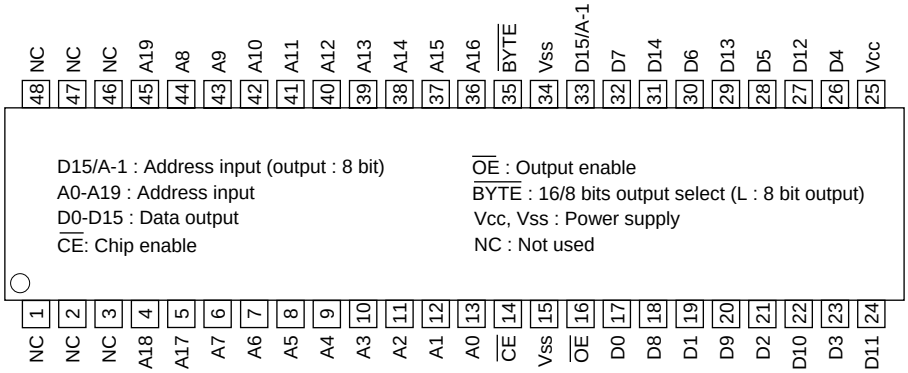

● **Pin Functions (PD5554A)**

Pin No.	Pin Name	I/O	Format	Function and Operation
1–4	NC			Not used
5	REM	I		Remote control reception
6	BYTE	I		VCC joint
7	CNVSS	I		GND
8,9	NC			Not used
10	$\overline{\text{RESET}}$			Reset
11	XOUT	O		Crystal oscillating element connection pin
12	VSS			GND
13	XIN	I		Crystal oscillating element connection pin
14	VDD			Power voltage
15	$\overline{\text{NMI}}$	I		Pull up
16	NC			Not used
17–20	$\overline{\text{KD1-4}}$	I		Key data 1-4
21–26	$\overline{\text{KS1-6}}$	I/O		Key strobe input/output 1-6
27–31	NC			Not used
32	ILMD	O	C	Dual illumination
33	KYDT	O	C	Key data output
34	DPDT	I		Display data input
35	NC			Not used
36	OEL	O	C	OEL controller ON
37	$\overline{\text{RDY}}$	I		OEL controller READY
38	NC			Not used
39	$\overline{\text{HOLD}}$	I		Pull up
40	NC			Not used
41	BCLK	O	C	Bus clock
42	$\overline{\text{RD}}$	O	C	Read strobe
43	NC			Not used
44	$\overline{\text{WR}}$	O	C	Write strobe
45	NC			Not used
46	$\overline{\text{CS2}}$	O	C	Bunk address (High)
47	$\overline{\text{CS1}}$	O	C	Bank address (Low)
48	$\overline{\text{CS0}}$	O	C	External ROM chip select
49–59	A19-9	O	C	Address bus 19-9
60	VDD			Power voltage
61	A8	O	C	Address bus 8
62	VSS			GND
63–70	A7-0	O	C	Address bus 7-0
71–86	D15-0	I/O		Data bus 15-0
87–93	NC			Not used
94	AVSS			Connect to VSS
95	NC			Not used
96	VREF			Connect to VSS
97	AVCC			Connect to VCC
98–100	NC			Not used

*PD5554A

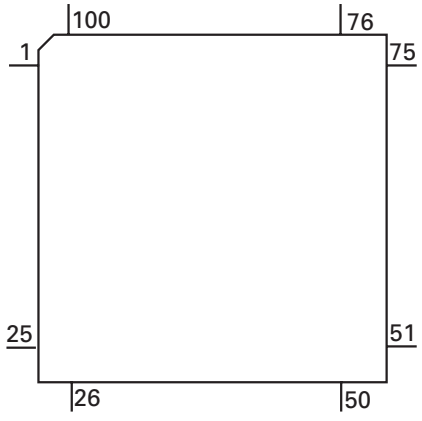

Format	Meaning
C	C MOS

● **Pin Functions (PD5536A)**

Pin No.	Pin Name	I/O	Format	Function and Operation
1	VSSO			GND
2	SFR	I		CPU SFR input
3–10	DB7-0	I/O		CPU data bus input / output 7-0
11	NPC	I		Non-precharge mode set input
12	VDDI			Power supply
13	VSSI			GND
14	SHUNT	I		Non-luminescence section anode shunt set input
15	TIO0	O	C	Frame period signal output
16	TIO1	O	C	Frame period inversion signal output
17	CKC	O	C	Cathode drive clock output
18	LS	O	C	Line sync signal output
19	CKA	O	C	Anode drive clock output
20	D2	O	C	Anode serial data output (Upper bit)
21	D1	O	C	Anode serial data output (Lower bit)
22	CKD	O	C	Anode serial transfer clock output
23	NC			Not used
24	VDDO			Power supply
25	VSSO			GND
26	NC			Not used
27–30	TEST0-3	I		Test mode input 0-3
31–35	TESTL0-4	I		Panel indication test mode brightness set input 0-4
36	VDDI			Power supply
37	VSSI			GND
38	BCLK	I		CPU bus clock signal input
39	CE1B	I		CPU chip enable input 1
40	CE2	I		CPU chip enable input 2
41	RDB	I		CPU read strobe input
42	WRB	I		CPU write strobe input
43	RSTB	I		Reset
44–47	CRST3-0	I		Cathode reset section set input 3-0
48	VDDO			Power supply

*PD5536A

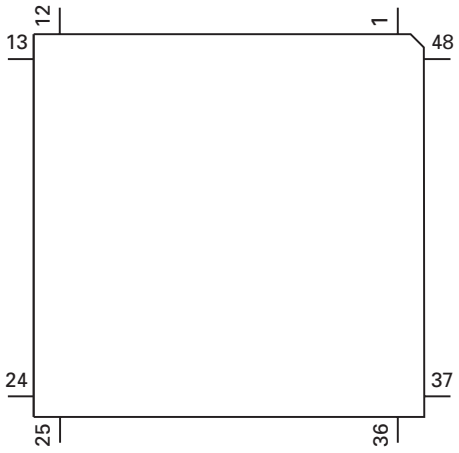

● **Pin Functions (UPD63711GC)**

Pin No.	Pin Name	I/O	Function and Operation
1	D.GND		Logic circuit GND
2	RFOK	O	RFOK signal output
3	$\overline{RST}$	I	Reset signal input
4	A0	I	Command/parameter identification signal input
5	$\overline{STB}$	I	Data strobe signal input
6	$\overline{SCK}$	I	Clock signal input for serial data input/output
7	SO	O	Serial data and status signal output
8	SI	I	Serial data input
9	$\overline{XTALEN}$	I	Crystal oscillation control pin
10	D.VDD		Positive power supply terminal to logic circuit
11	DA.VDD		Positive power supply terminal to D/A converter
12	R_OUT	O	Right channel audio output signal
13	DA.GND		D/A converter GND
14	REGC	I	The outside putting capacitor connection pin for SCF regulator
15	DA.GND		D/A converter GND
16	L_OUT	O	Left channel audio output signal
17	DA.VDD		Positive power supply terminal to D/A converter
18	R+	O	Right channel audio data output
19	R-	O	Right channel audio data output
20	L-	O	Left channel audio data output
21	L+	O	Left channel audio data output
22	X.VDD		Positive power supply terminal to crystal oscillation circuit
23	XTAL	I	Crystal oscillator connect pin
24	$\overline{XTAL}$	O	Crystal oscillator connect pin
25	X.GND		Crystal oscillation circuit GND
26	D.VDD		Positive power supply terminal to logic circuit
27	EMPH	O	Output pin for the pre-emphasis data in the sub-Q code
28	FLAG	O	Flag output pin to indicate that audio data currently being output consists of noncorrectable data
29	DIN	I	Serial data input to internal DAC
30	DOUT	O	Serial audio data output
31	SCKIN	I	Serial clock input to internal DAC
32	SCKO	O	Audio data that is output from DOUT changes at rising edge of this clock
33	LRCKIN	I	LRCK signal input to internal DAC
34	LRCK	O	Signals to distinguish the right and left channels of the audio data output from DOUT
35	HOLD	O	Defect detection output
36	TX	O	Digital audio interface data output
37	D.GND		Logic circuit GND
38	C16M	O	Oscillator clock buffering output
39	LIMIT	I	Status of the pin is output at Bit 5 of the status output
40	D.VDD		Positive power supply terminal to logic circuit
41	LOCK	O	EFM synchronous detection signal
42	RFCK	O	Frame synchronous signal of XTAL-system
43	MIRR	O	MIRR output
44	PLCK	O	Monitor pin of bit clock
45	D.GND		Logic circuit GND
46	C1D1	O	Output pin for indicating the C1 error correction results
47	C1D2	O	Output pin for indicating the C1 error correction results
48	C2D1	O	Output pin for indicating the C2 error correction results
49	C2D2	O	Output pin for indicating the C2 error correction results
50	C2D3	O	Output pin for indicating the C2 error correction results
51	D.VDD		Positive power supply terminal to logic circuit
52	PACK	O	CD-TEXT PACK synchronous signal
53	TSO	O	CD-TEXT data serial output
54	TSI	I	CD-TEXT control parameter serial input
55	$\overline{TSCK}$	I	CD-TEXT serial clock input

Pin No.	Pin Name	I/O	Function and Operation
56	TSTB	I	CD-TEXT parameter strobe signal input
57	D.GND		Logic circuit GND
58	TEST0	I	Test pin
59	TEST1	I	Test pin
60	ATEST	O	Test pin
61	A.GND		Analog circuit GND
62	FD	O	Focus drive output
63	TD	O	Tracking drive output
64	SD	O	Sled drive output
65	MD	O	Spindle drive output
66	DAC0	O	DAC output for adjustment
67	DAC1	O	DAC output for adjustment
68	DAC2	O	DAC output for adjustment
69	DAC3	O	DAC output for adjustment
70	A.VDD		Positive power supply terminal to analog circuit
71	EFM	O	EFM signal output
72	ASY	I	EFM comparator reference voltage input
73	C3T		3T detection capacitor additional pin
74	RFI	I	RF signal input for EFM data regulation
75	AGCO	O	RF signal output of after gain adjustment
76	AGCI	I	RF-AGC amplifier input
77	RFO	O	RF summing amplifier output
78	EQ2		RF amplifier equalizer parts additional pin
79	EQ1		RF amplifier equalizer parts additional pin
80	RF-	I	RF summing amplifier inverted input
81	A.GND		Analog circuit GND
82	A	I	Photo detector A input
83	C	I	Photo detector C input
84	B	I	Photo detector B input
85	D	I	Photo detector D input
86	F	I	Photo detector F input
87	E	I	Photo detector E input
88	A.VDD		Positive power supply terminal to analog circuit
89	REFOUT	O	Reference electric potential output
90	FE-	I	Focus error amplifier inverted input
91	FEO	O	Focus error amplifier output
92	TE-	I	Tracking error amplifier inverted input
93	TEO	O	Tracking error amplifier output
94	TE2	O	Tracking error output of after amplification
95	TEC	I	Tracking comparator input
96	A.GND		Analog circuit GND
97	PD	I	PD detection signal input for LD output monitor
98	LD	O	LD control current output
99	PN	I	APC circuit control polarity set pin
100	A.VDD		Positive power supply terminal to analog circuit

*UPD63711GC

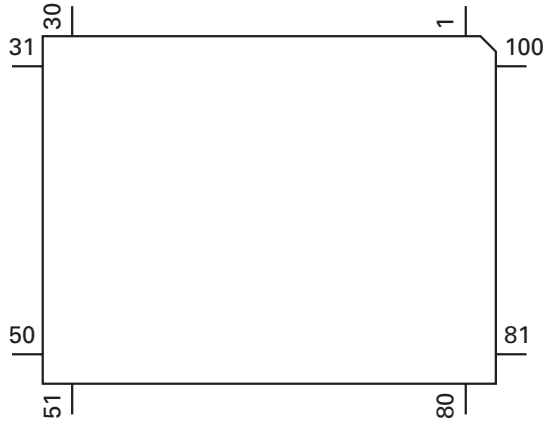

7.3 OPERATIONAL FLOW CHART

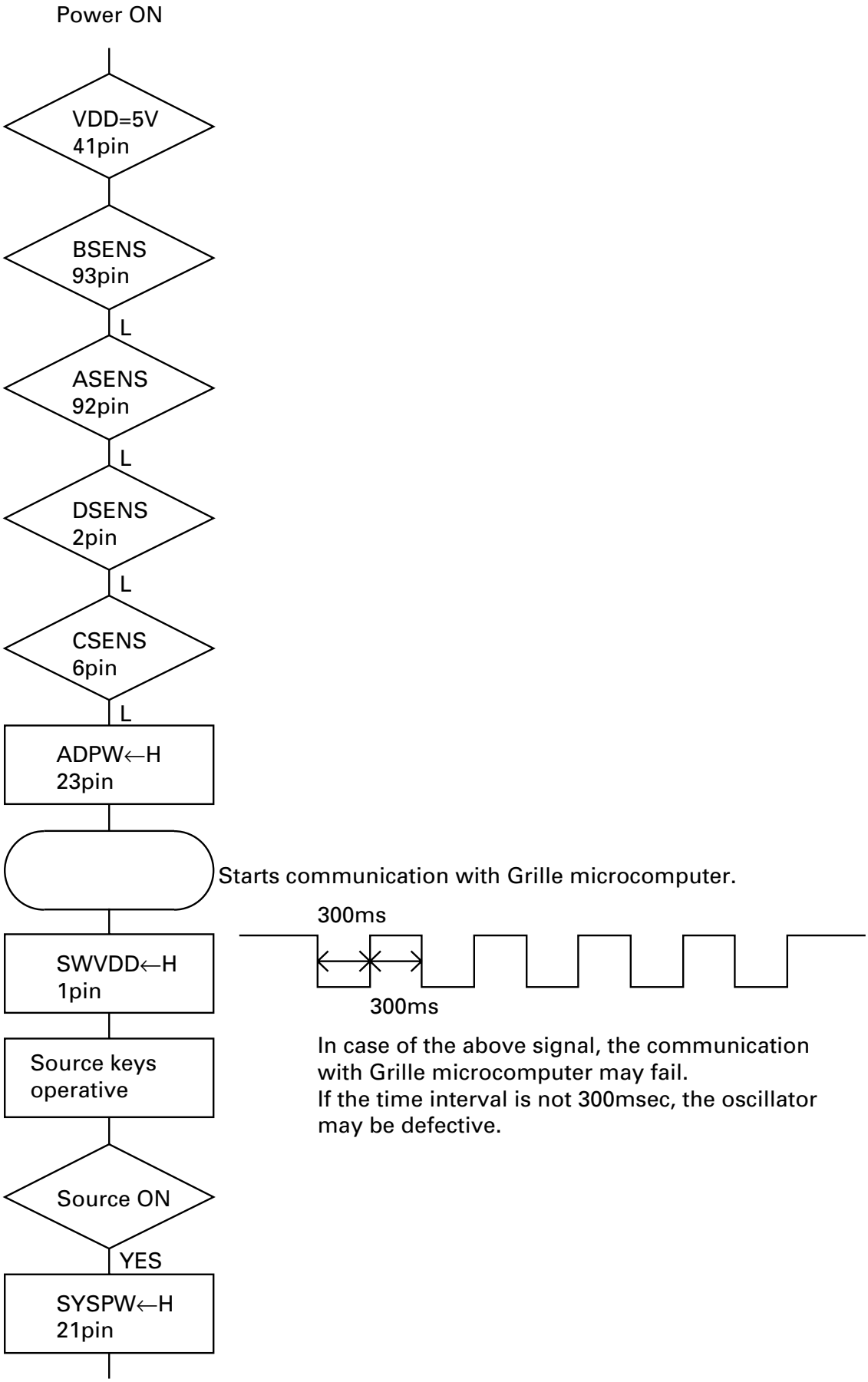

8. OPERATIONS AND SPECIFICATIONS

8.1 OPERATIONS

Key Finder

Head Unit

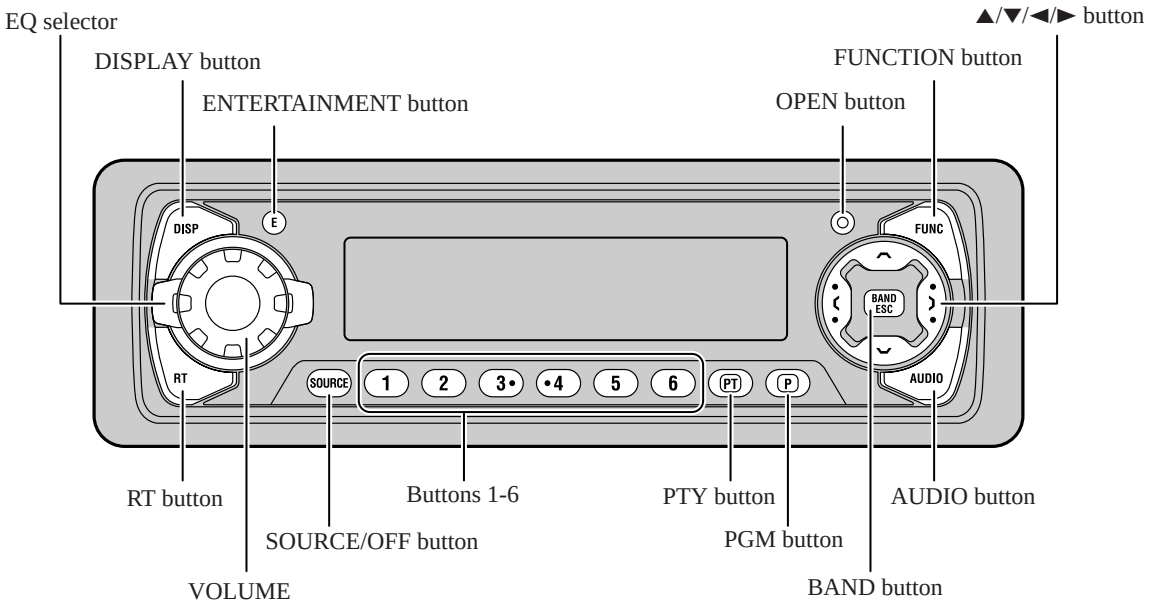

Remote Controller

A remote controller that enables remote operation of the head unit is supplied. Operation is the same as when using buttons on the head unit.

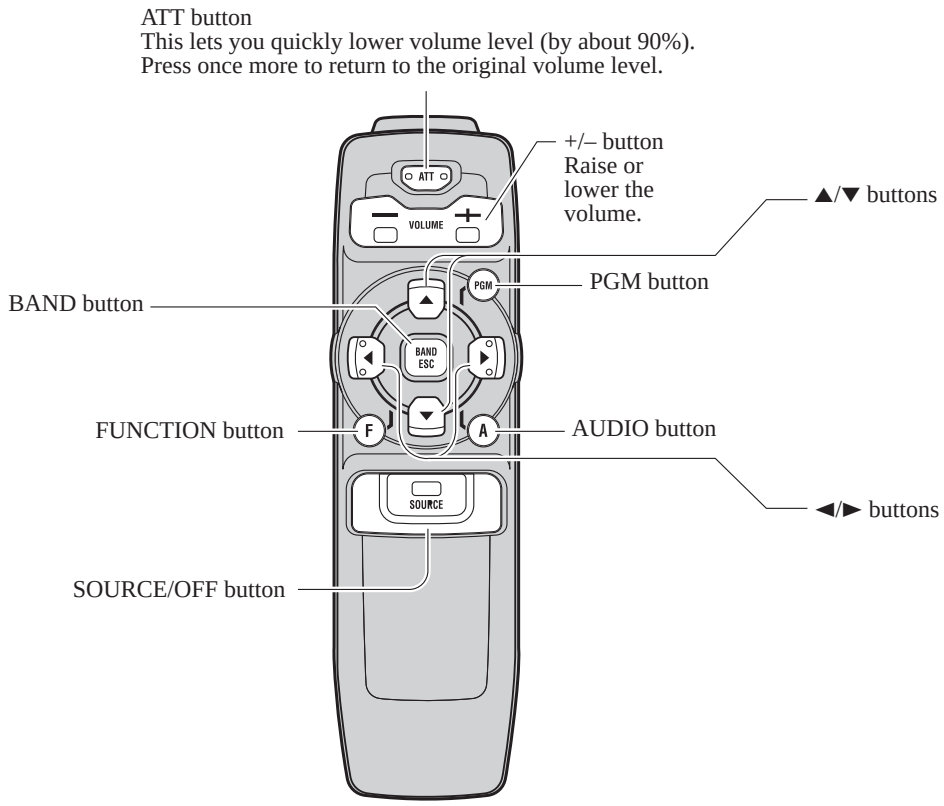

To Listen to Music

The following explains the initial operations required before you can listen to music.

Note:
- Loading a disc in this product.

1. Select the desired source. (e.g. Tuner)

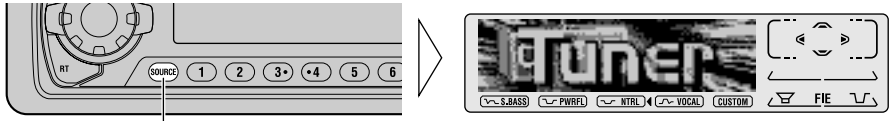

Each press changes the Source ...

Each press of the SOURCE/OFF button selects the desired source in the following order:
Built-in CD player → TV → Tuner → Multi-CD player → External Unit 1 → External Unit 2 → AUX → Telephone standby

Note:
- External Unit refers to a Pioneer product (such as one available in the future) that, although incompatible as a source, enables control of basic functions by this product. Two External Units can be controlled by this product, although "External" is displayed whether you select External Unit 1 or External Unit 2. When two External Units are connected, the allocation of them to External Unit 1 or External Unit 2 is automatically set by this product.
- In the following cases, the sound source will not change:
  * When a product corresponding to each source is not connected to this product.
  * When no disc is set in this product.
  * When no magazine is set in the Multi-CD player.
  * When the AUX (external input) is set to OFF.
  * When the Telephone standby is set to OFF
- When this product's blue/white lead is connected to the car's Auto-antenna relay control terminal, the car's Auto-antenna extends when this product's source is switched ON. To retract the antenna, switch the source OFF.

2. Extend the VOLUME forward.

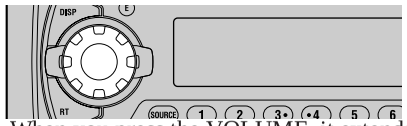

When you press the VOLUME, it extends forward so that it becomes easier to roll. To retract the VOLUME, press it again.

3. Raise or lower the volume.

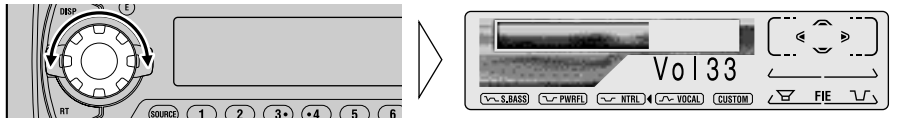

Rolling the VOLUME changes the volume level.

Note:
- Roll clockwise to raise the volume level.
- Roll counterclockwise to lower the volume level.

4. Turn the source OFF.

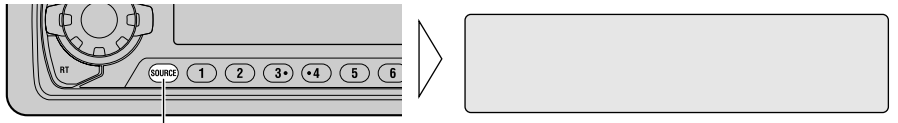

Hold for 1 second

Basic Operation of Built-in CD Player

Note:
- Be sure to close the front panel after loading or ejecting a disc.

Switching the Display

Each press of the DISPLAY button changes the display in the following order:
Playback mode A (Play time) → Disc Title → Playback mode B (Play time)

Note:
- If you switch displays when disc titles have not been input, “NO TITLE” is displayed.
- When playing a CD TEXT disc, refer to “Title Display Switching” and “Title Scroll”.

Open

Note:
- Use to open the front panel when loading or ejecting a CD. (The illustration on the right shows the front panel open.)

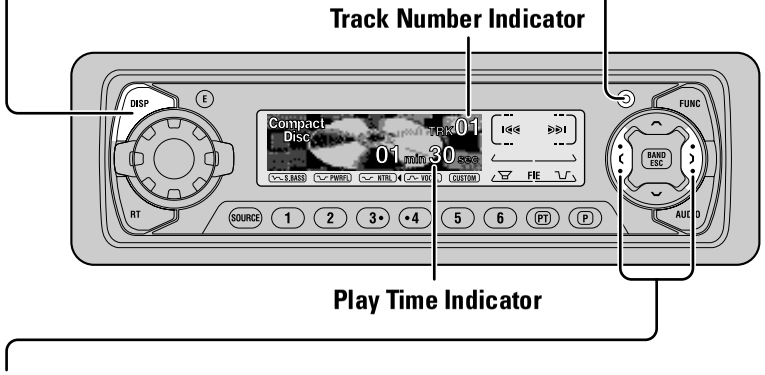

Track Search and Fast Forward/Reverse

- **You can select between Track Search or Fast Forward/Reverse by pressing the ◄/► button for a different length of time.**

Track Search	0.5 seconds or less
Fast Forward/Reverse	Continue pressing

Disc Loading Slot

Note:
- The Built-in CD player plays one standard 12 cm or 8 cm (single) CD at a time. Do not use an adapter when playing 8 cm CD.

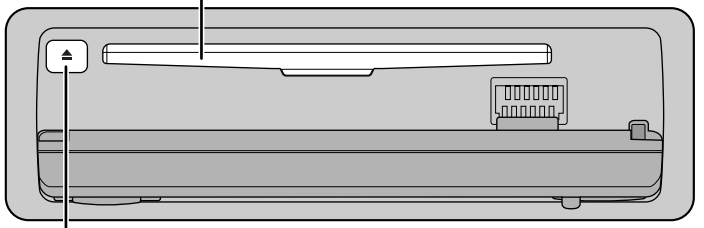

Eject

Precaution:
- To avoid a malfunction, make sure that no metal object comes into contact with the terminals when the front panel is open.

Note:
- The CD function can be turned ON/OFF with the disc remaining in this product.
- A disc left partially inserted after ejection may incur damage or fall out.

Note:
- If a disc cannot be inserted fully or playback fails, make sure the recorded side is down. Press the EJECT button and check the disc for damage before reinserting it.
- If the Built-in CD player cannot operate properly, an error message (such as “ERROR-14”) appears on the display. Refer to “Built-in CD Player’s Error Message”.
- A CD TEXT disc is a CD featuring recorded text information such as Disc Title, Artist Name and Track Title.

Basic Operation of Multi-CD Player

This product can control a Multi-CD player (sold separately).

Track Search and Fast Forward/Reverse

- **You can select between Track Search or Fast Forward/Reverse by pressing the ◄/► button for a different length of time.**

Track Search	0.5 seconds or less
Fast Forward/Reverse	Continue pressing

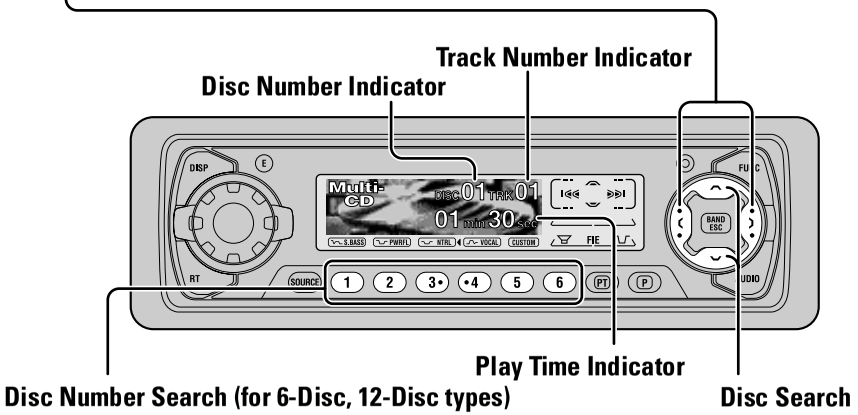

- **You can select discs directly with the 1 to 6 buttons. Just press the number corresponding to the disc you want to listen to.**

Note:
- When a 12-Disc Multi-CD Player is connected and you want to select disc 7 to 12, press the 1 to 6 buttons for 2 seconds or longer.

Note:
- The Multi-CD player may perform a preparatory operation, such as verifying the presence of a disc or reading disc information, when the power is turned ON or a new disc is selected for playback. “Ready” is displayed.
- If the Multi-CD player cannot operate properly, an error message such as “ERROR-14” is displayed. Refer to the Multi-CD player owner’s manual.
- If there are no discs in the Multi-CD player magazine, “NO DISC” is displayed.

Corresponding Display Indications and Buttons

This product’s display features Key Guidance Indicators. These light to indicate which of the ▲/▼/◄/►, FUNCTION and AUDIO buttons you can use. When you’re in the Function Menu, Detailed Setting Menu, Initial Setting Menu or Audio Menu, they also make it easy to see which ▲/▼/◄/► buttons you can use to switch functions ON/OFF, switch repeat selections and perform other operations.
Indicator and corresponding buttons are shown below.

■ **Head Unit** ■ **Remote Controller** ■ **Display**

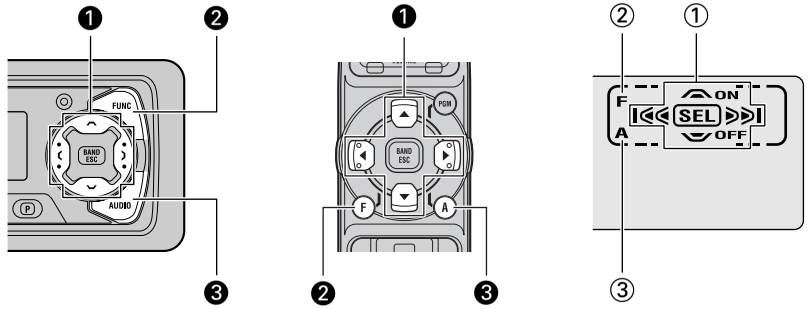

When ① is lit in the display, perform appropriate operations with the ❶ buttons.
When ② is lit in the display, it indicates that you are in the Function Menu, Detailed Setting Menu or Initial Setting Menu. You can switch between each of these menus and between different modes in the menus using button ❷ on the head unit or remote controller.
When ③ is lit in the display, it indicates you are in the Audio Menu. You can switch between modes in the Audio Menu using button ❸ on the head unit or remote controller.

Entering the Function Menu

The Function Menu lets you operate simple functions for each source.

Note:
- After entering the Function Menu, if you do not perform an operation within about 30 seconds, the Function Menu is automatically canceled.

1. **Select the desired mode in the Function Menu. (Refer to next section, “Function Menu Functions”.)**

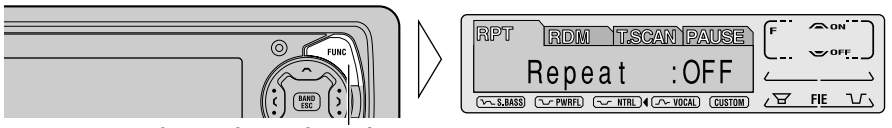

Each press changes the Mode ...

2. Operate a mode. (e.g. Repeat Play)

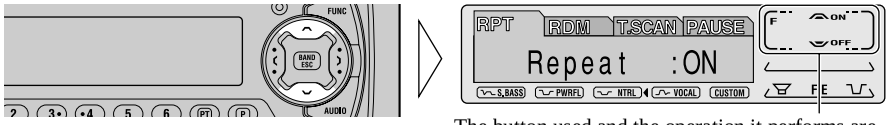

The button used and the operation it performs are indicated by the key guidance indicator. Press the ▲ button to switch the key guidance indicator ON, and the ▼ button to switch it OFF.

3. Cancel the Function Menu.

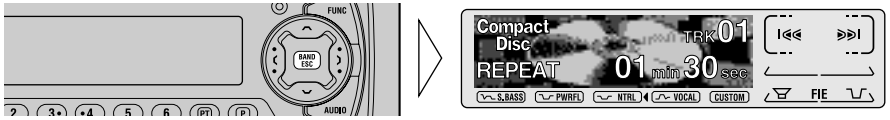

Basic Operation of Tuner

Manual and Seek Tuning

- **You can select the tuning method by changing the length of time you press the ◄/► button.**

Manual Tuning (step by step)	0.5 seconds or less
Seek Tuning	0.5 seconds or more

Note:
- If you continue pressing the button for longer than 0.5 seconds, you can skip broadcasting stations. Seek Tuning starts as soon as you release the button.
- Stereo indicator "◯◯" lights when a stereo station is selected.

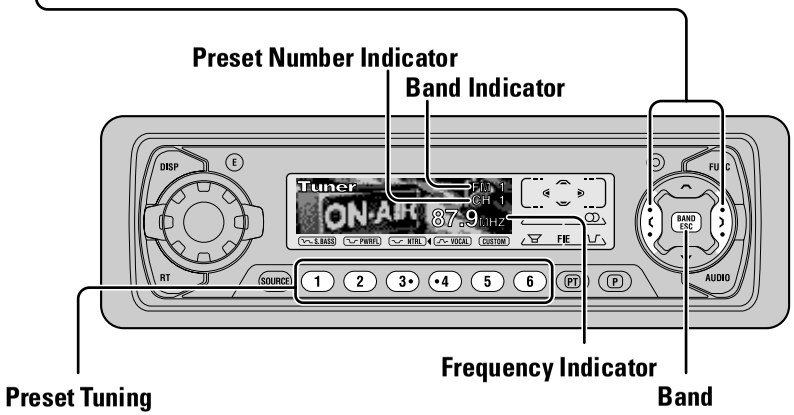

FM 1 → FM 2 → FM 3 → AM

- **You can memorize broadcast stations in buttons 1 through 6 for easy, one-touch station recall.**

Preset station recall	2 seconds or less
Broadcast station preset memory	2 seconds or more

Note:
- Up to 18 FM stations (6 in FM 1, FM 2 and FM 3) and 6 AM stations can be stored in memory.
- You can also use the ▲ or ▼ buttons to recall broadcast stations memorized in buttons 1 through 6.

■ When not connecting a rear speaker lead to a Subwoofer

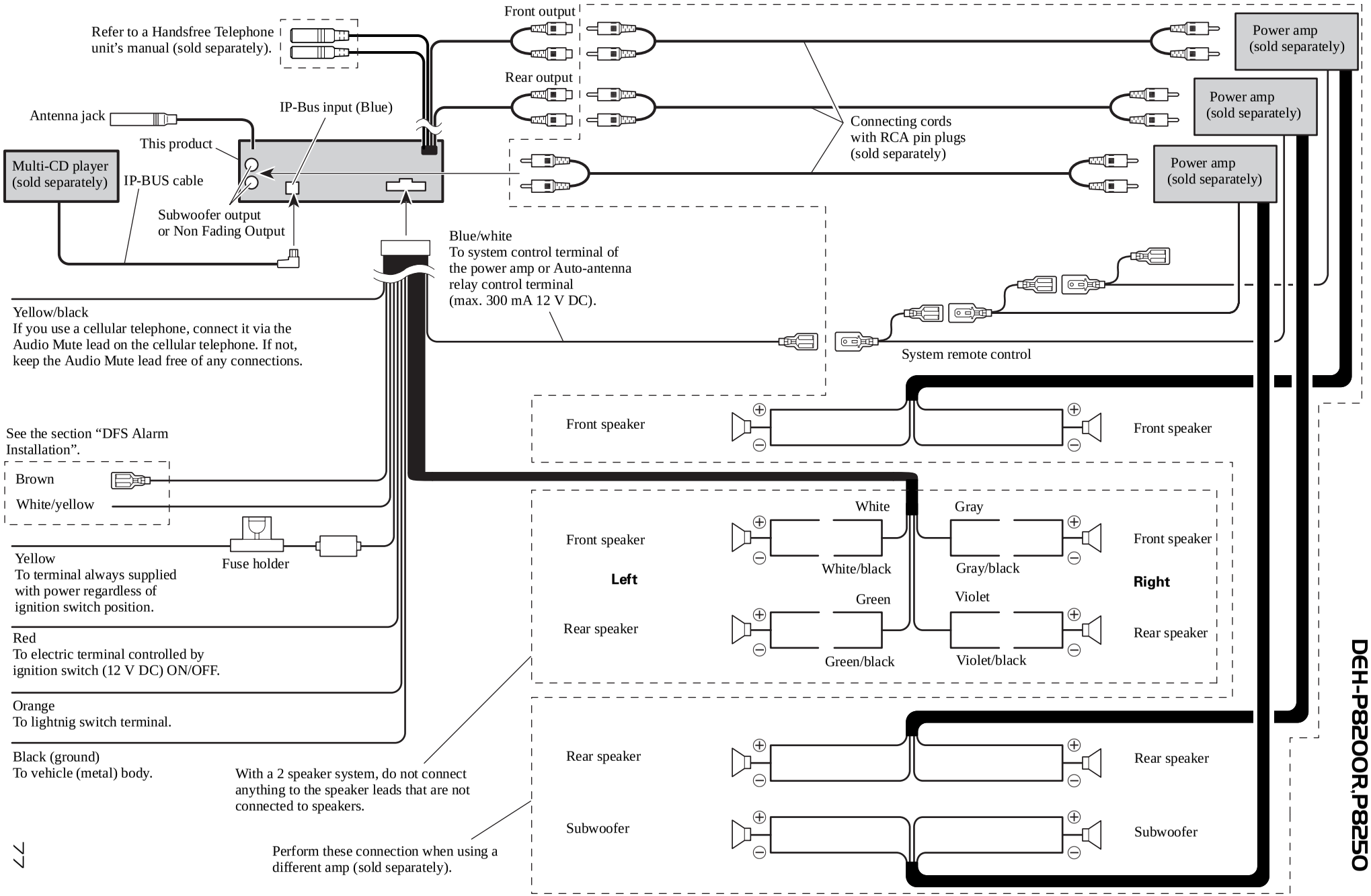

8.2 SPECIFICATIONS

General

Power source ..... 14.4 V DC (10.8 – 15.1 V allowable)
Grounding system ..... Negative type
Max. current consumption ..... 10.0 A
Dimensions
(DIN) (chassis) ..... 178 (W) × 50 (H) × 157 (D) mm
[7 (W) × 2 (H) × 6-1/8 (D) in]
(nose) ..... 188 (W) × 58 (H) × 19 (D) mm
[7-3/8 (W) × 2-1/4 (H) × 3/4 (D) in]
(D) (chassis) ..... 178 (W) × 50 (H) × 162 (D) mm
[7 (W) × 2 (H) × 6-3/8 (D) in]
(nose) ..... 170 (W) × 46 (H) × 14 (D) mm
[6-3/4 (W) × 1-3/4 (H) × 1/2 (D) in]
Weight ..... 1.6 kg (3.5 lbs)

Amplifier

Continuous power output is 22 W per channel min. into 4 ohms, both channels driven 50 to 15,000 Hz with no more than 5% THD.
Maximum power output ..... 45 W × 4
45 W × 2 ch/4 Ω + 70 W × 1 ch/2 Ω (for Subwoofer)
Load impedance
..... 4 Ω (4 – 8 Ω [2 Ω for 1 ch] allowable)
Preout maximum output level/
output impedance ..... 4.0 V/100 Ω
Equalizer (3-Band Parametric Equalizer)
(Low) ..... Frequency: 40/80/100/160 Hz
Q Factor: 0.35/0.59/0.95/1.15
(+6 dB when boosted)
Level: ±12 dB
(Mid) ..... Frequency: 200/500/1k/2k Hz
Q Factor: 0.35/0.59/0.95/1.15
(+6 dB when boosted)
Level: ±12 dB
(High) ..... Frequency: 3.15k/8k/10k/12.5k Hz
Q Factor: 0.35/0.59/0.95/1.15
(+6 dB when boosted)
Level: ±12 dB
Loudness contour
(Low) ..... +3.5 dB (100 Hz), +3 dB (10 kHz)
(Mid) ..... +10 dB (100 Hz), +6.5 dB (10 kHz)
(High) ..... +11 dB (100 Hz), +11 dB (10 kHz)
(volume: –30 dB)
HPF
Frequency ..... 50/80/125 Hz
Slope ..... –12 dB/oct
Subwoofer output
Frequency ..... 50/80/125 Hz
Slope ..... –18 dB/oct
Gain ..... ±12 dB

CD player

System ..... Compact disc audio system
Usable discs ..... Compact disc
Signal format ..... Sampling frequency: 44.1 kHz
Number of quantization bits: 16; linear
Frequency characteristics ..... 5 – 20,000 Hz (±1 dB)
Signal-to-noise ratio ..... 94 dB (1 kHz) (IHF-A network)
Dynamic range ..... 92 dB (1 kHz)
Number of channels ..... 2 (stereo)

FM tuner (DEH-P8200R/X1N/UC)

Frequency range ..... 87.9 – 107.9 MHz
Usable sensitivity ..... 10 dBf
(0.9 µV/75 Ω, mono, S/N: 30 dB)
50 dB quieting sensitivity .... 15 dBf (1.5 µV/75 Ω, mono)
Signal-to-noise ratio ..... 70 dB (IHF-A network)
Distortion ..... 0.3% (at 65 dBf, 1 kHz, stereo)
Frequency response ..... 30 – 15,000 Hz (±3 dB)
Stereo separation ..... 40 dB (at 65 dBf, 1 kHz)
Selectivity ..... 70 dB (2ACA)
Three-signal intermodulation
(desired signal level) ..... 30 dBf
(two undesired signal level: 100 dBf)

AM tuner (DEH-P8200R/X1N/UC)

Frequency range ..... 530 – 1,710 kHz (10 kHz)
Usable sensitivity ..... 18 µV (S/N: 20 dB)
Selectivity ..... 50 dB (±10 kHz)

FM tuner (DEH-P8250/X1N/ES)

Frequency range ..... 87.9 – 108 MHz
Usable sensitivity ..... 10 dBf
(0.9 µV/75 Ω, mono, S/N: 30 dB)
50 dB quieting sensitivity .... 15 dBf (1.5 µV/75 Ω, mono)
Signal-to-noise ratio ..... 70 dB (IEC-A network)
Distortion ..... 0.3% (at 65 dBf, 1 kHz, stereo)
Frequency response ..... 30 – 15,000 Hz (±3 dB)
Stereo separation ..... 40 dB (at 65 dBf, 1 kHz)

AM tuner (DEH-P8250/X1N/ES)

Frequency range ..... 531 – 1,602 kHz (9 kHz)
530 – 1,710 kHz (10 kHz)
Usable sensitivity ..... 18 µV (S/N: 20 dB)
Selectivity ..... 50 dB (±9 kHz)
50 dB (±10 kHz)

Note:

- Specifications and the design are subject to possible modification without notice due to improvements.